BOOT

0 ohm resistor --> Boot0 to R29

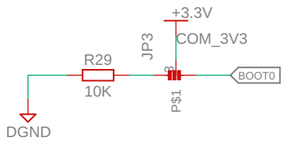

TCXO

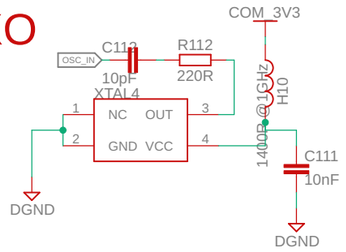

CAP NEAR MCU

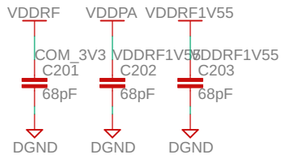

RST_switch

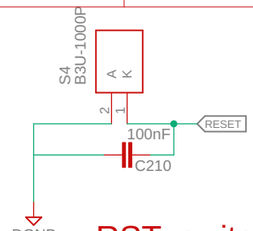

COM MCU

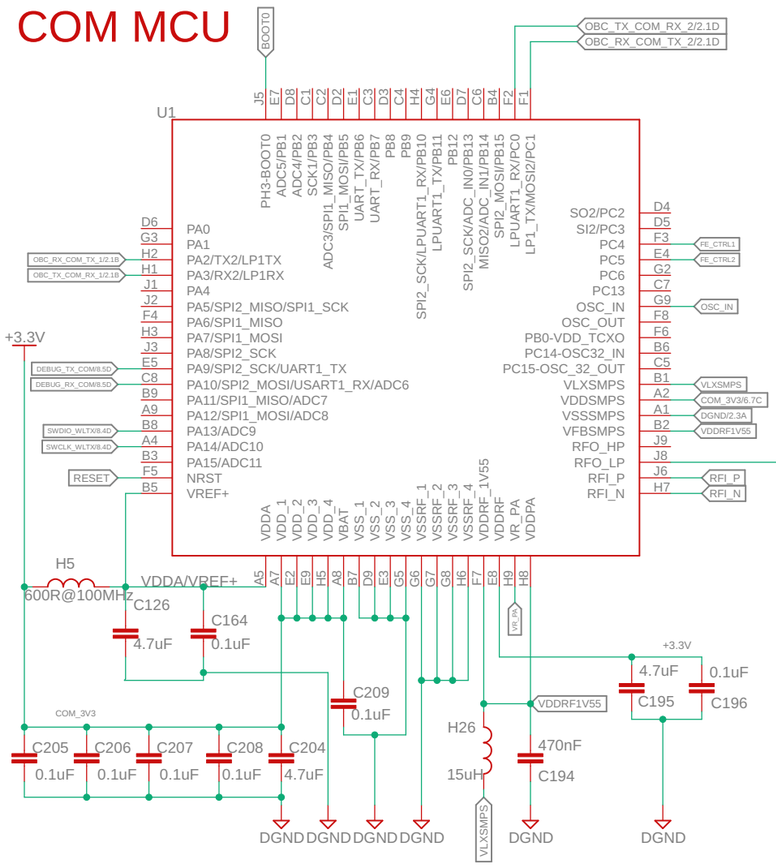

RF Amplifier

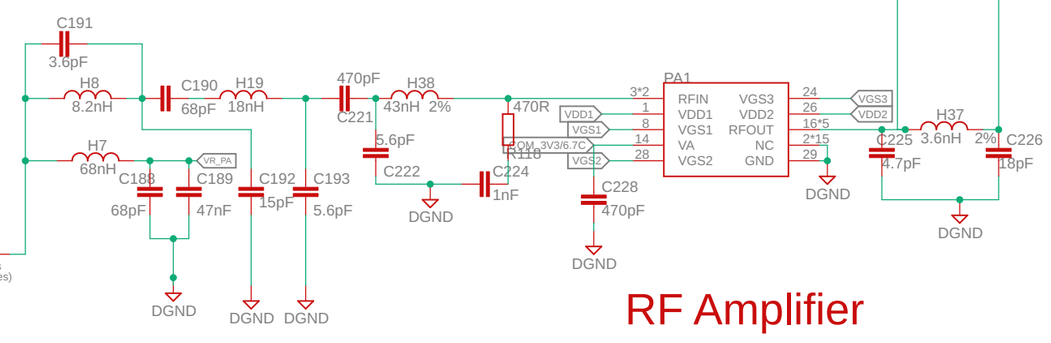

RF Switch

VGS

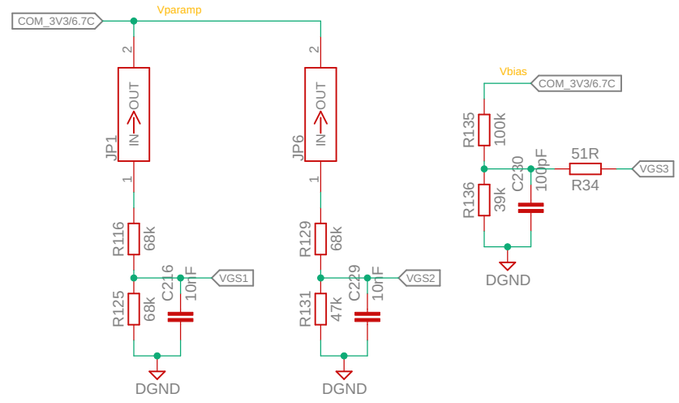

RFI

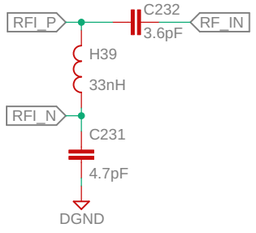

NXT_GEN_CUBUS_DAU_v0.0.2 v94

12/2/2024 5:25 PM

Sheet: 1/8

OBC

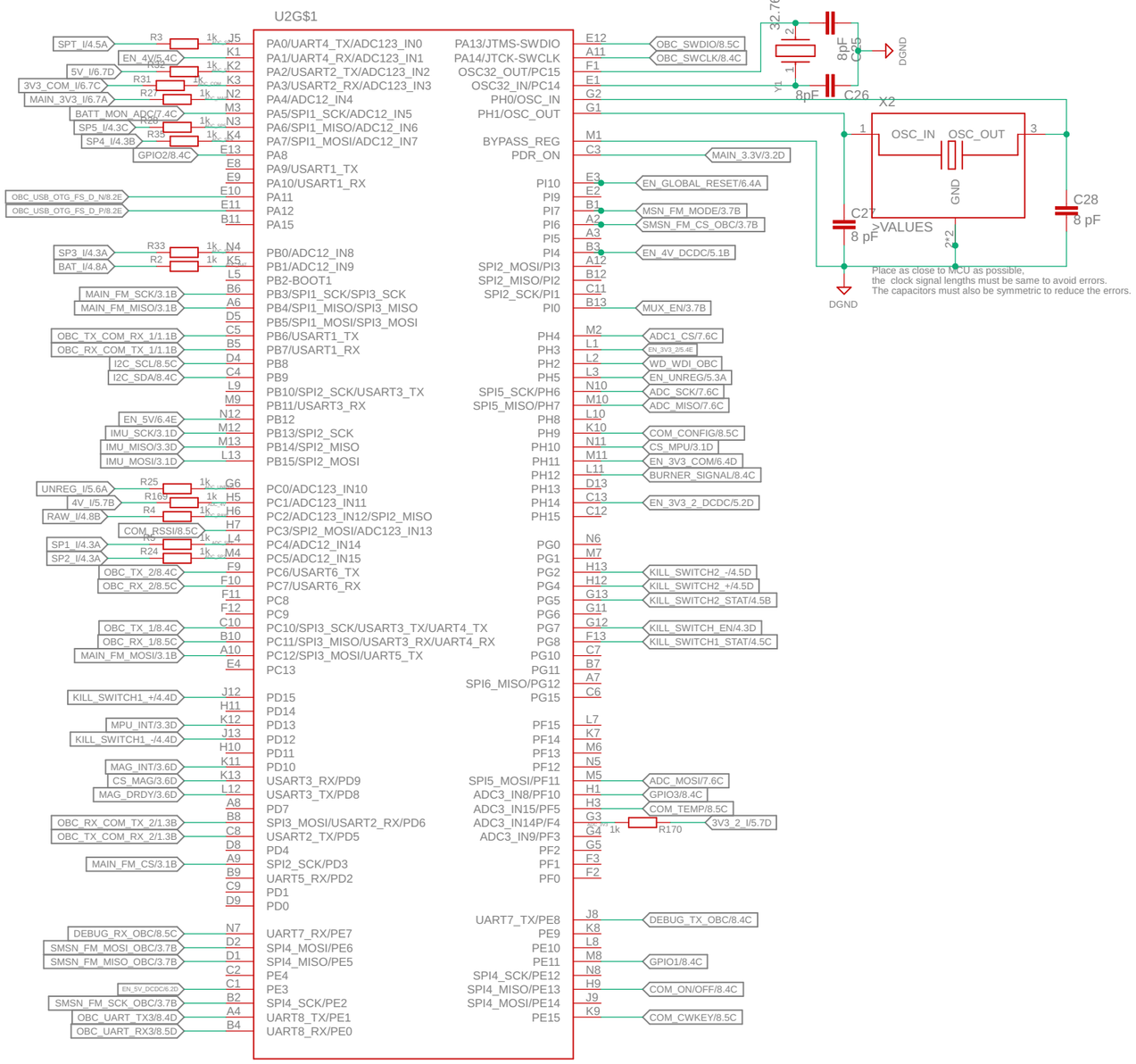

RST Switch

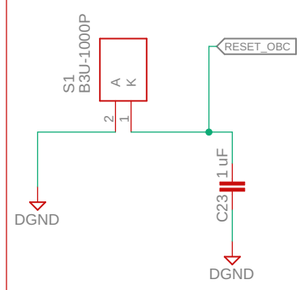

WATCHDOG TIMER

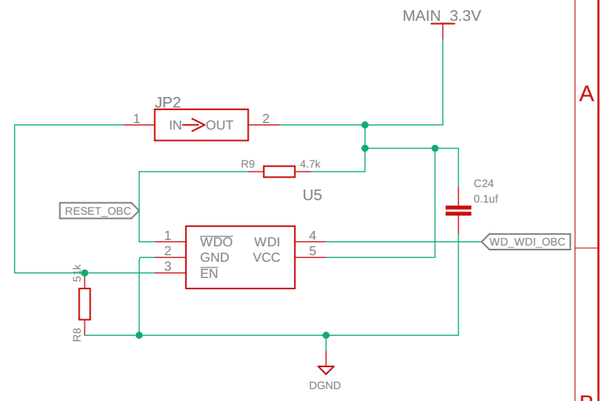

MCU Power

NXT_GEN_CUBUS_DAU_v0.0.2 v94	
12/2/2024 5:25 PM	
Sheet: 2/8	

MAIN_FLASH

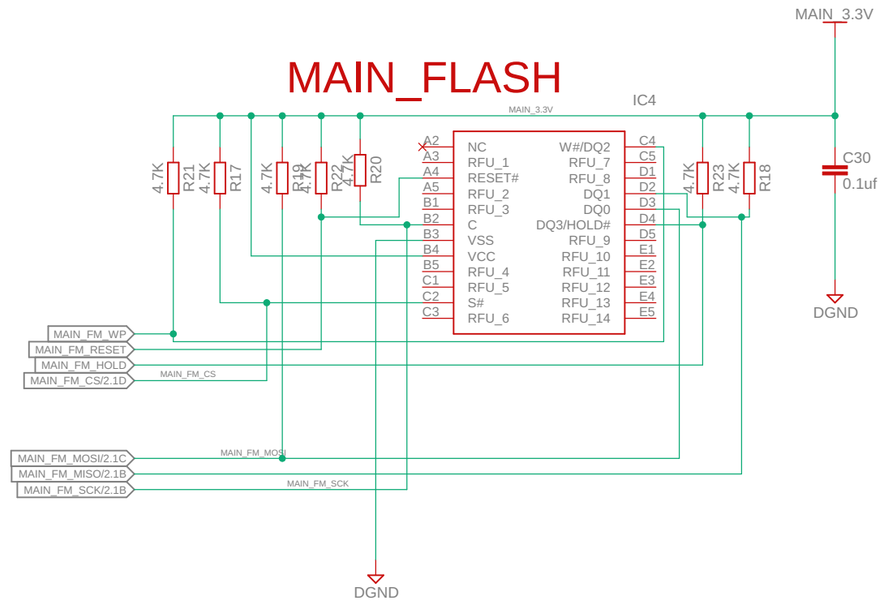

Shared MSN Flash

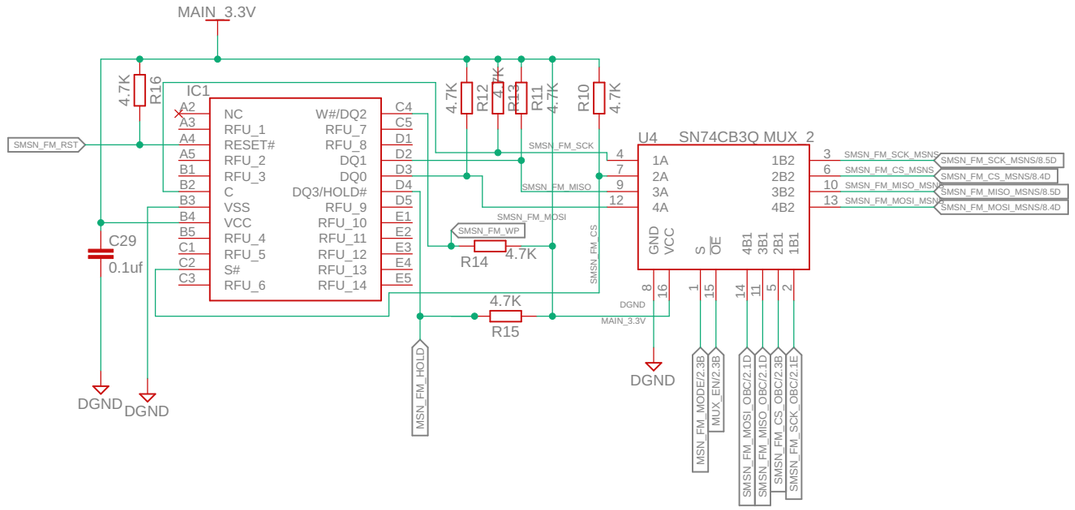

MPU6500

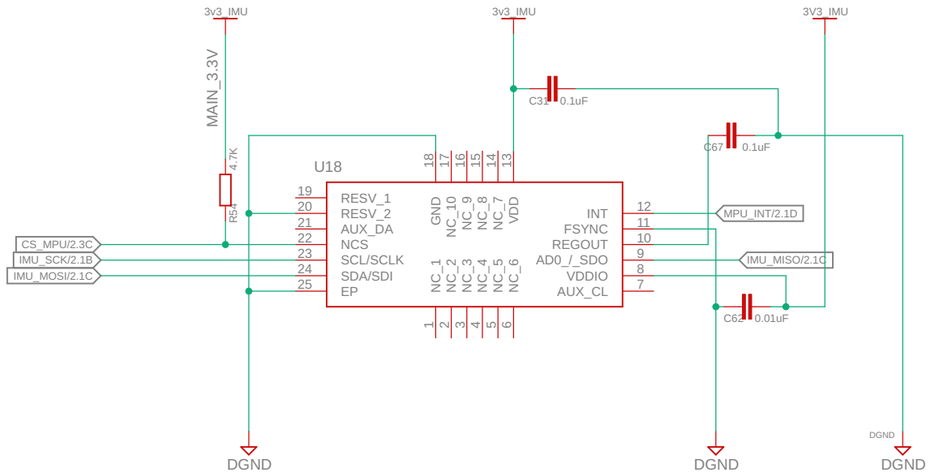

Mag

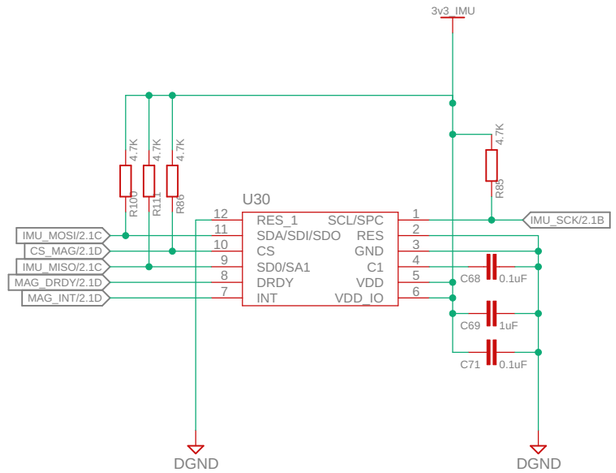

	NXT_GEN_CUBUS_DAU_v0.0.2 v94
	12/2/2024 5:25 PM
	Sheet: 3/8

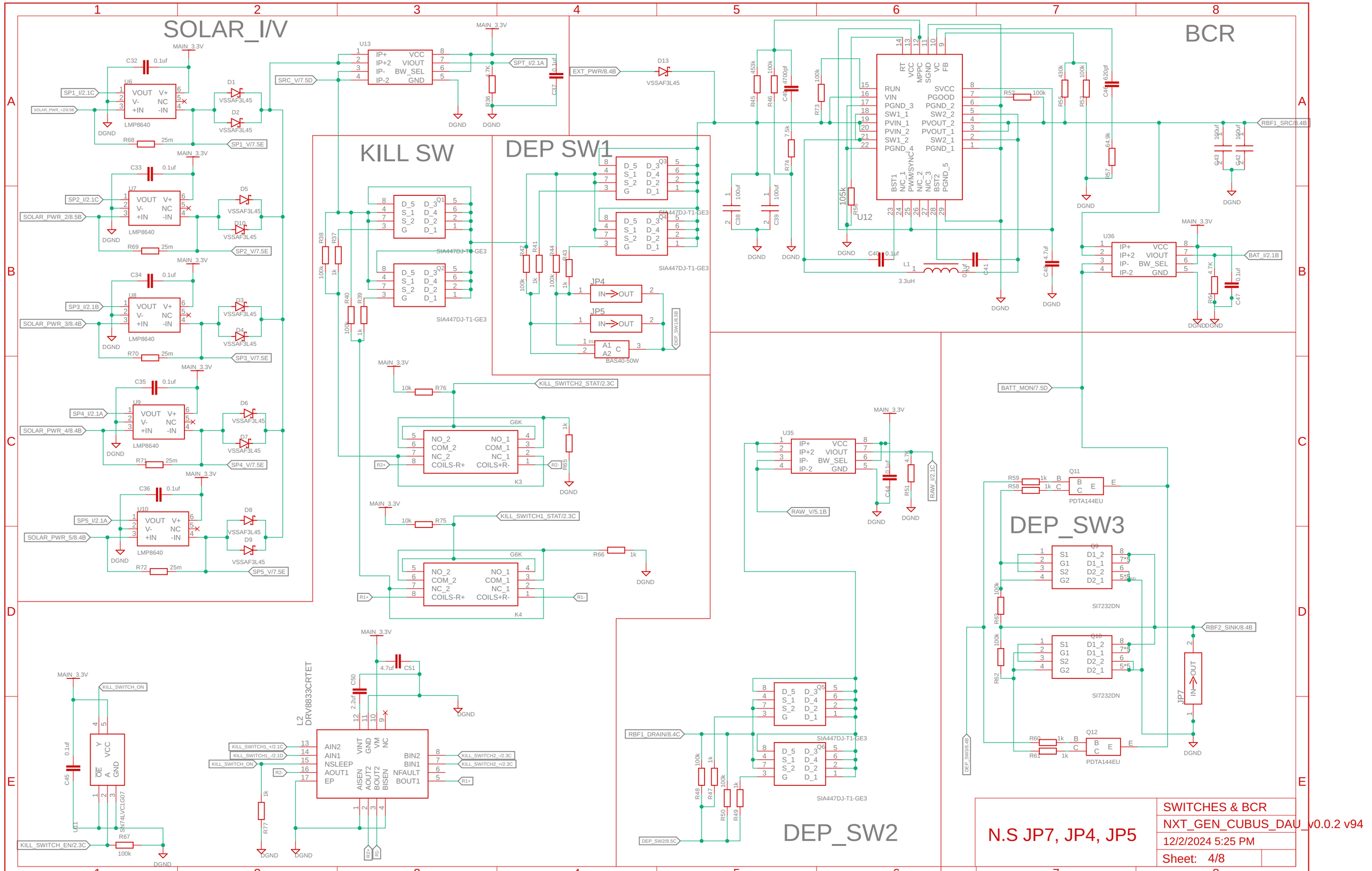

12/2/2024 5:30 PM C:\Users\Dell\Desktop\FM designs\FM_DAU_BOARD_ORDER\S2S\NXT_GEN_CUBUS_EM\CAMOutputs\NXT_GEN_CUBUS_DAU_v0.0.pdf (Sheet: 4/8)

UNREG_1

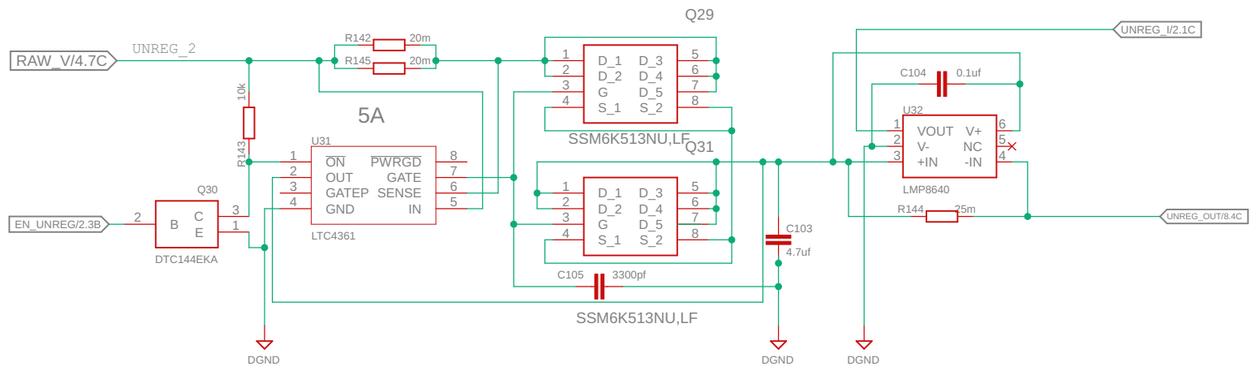

4V DC/DC 4V

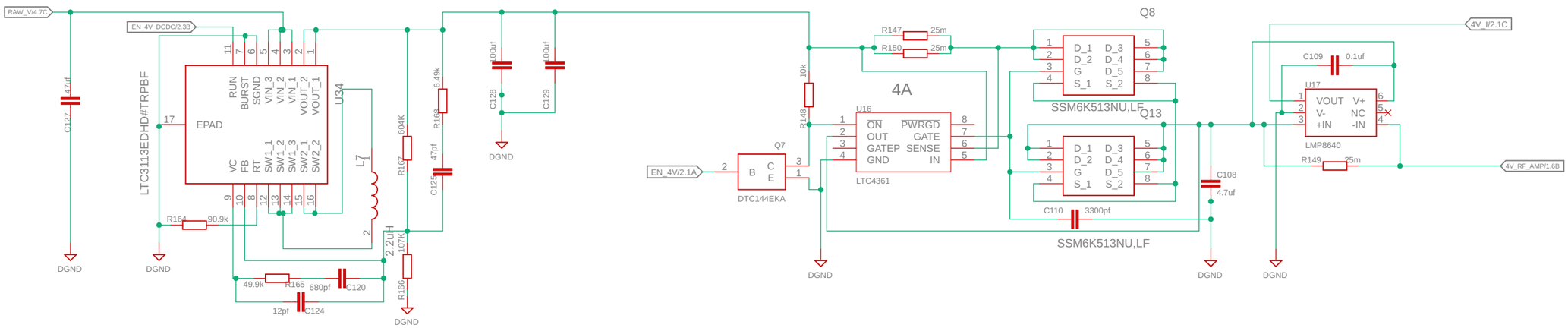

3V3_MSN DC/DC 3.3

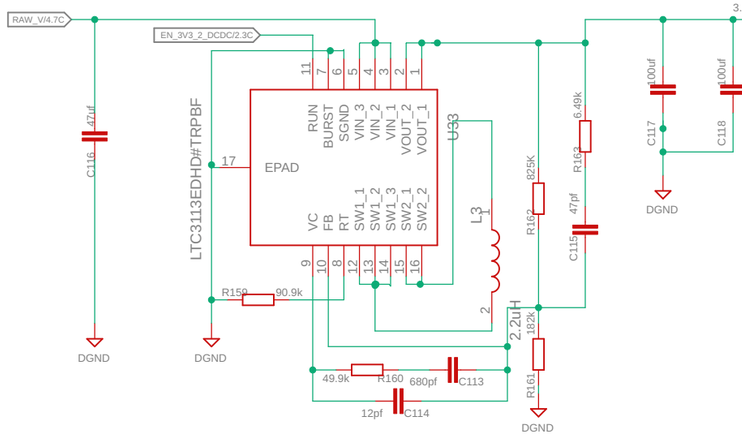

OCP

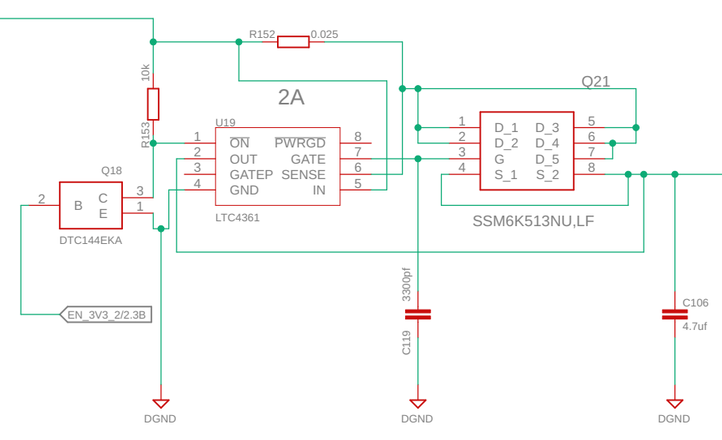

Current_Sensor

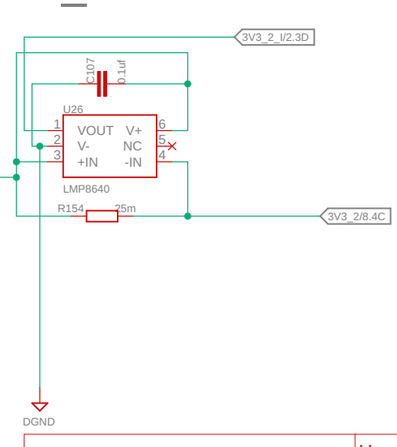

	Unreg, LDO & IMU Sensors
	NXT_GEN_CUBUS_DAU_v0.0.2 v94
	12/2/2024 5:25 PM
	Sheet: 5/8

3V3_OBC

DC/DC MAIN

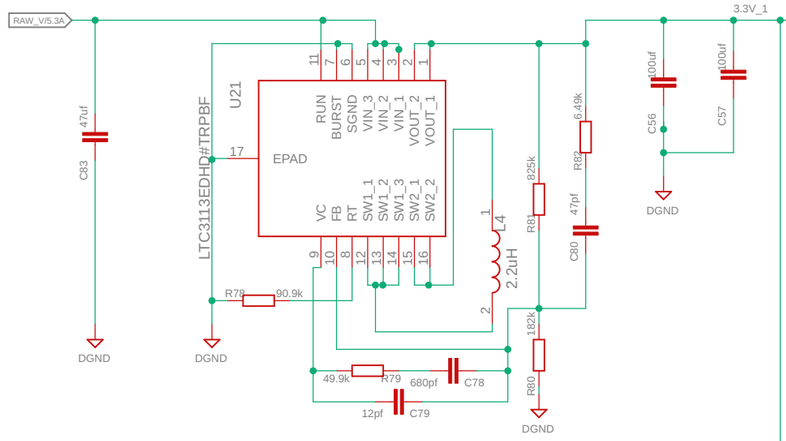

OCP 500 mA

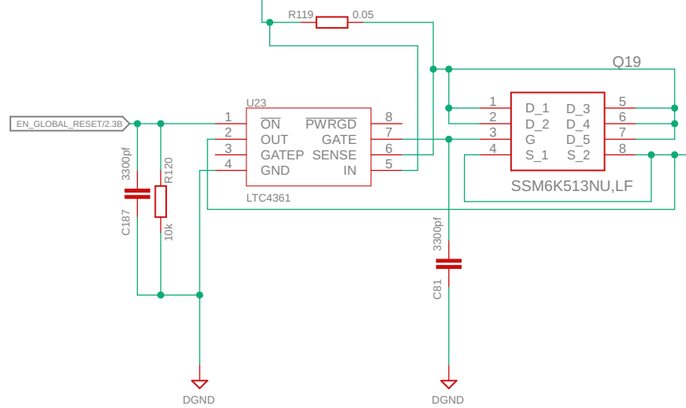

Current_Sensor

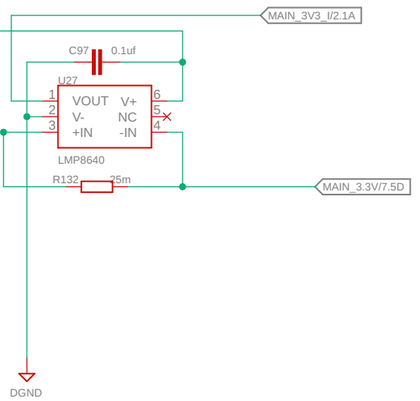

3V3_COM

OCP 500 mA

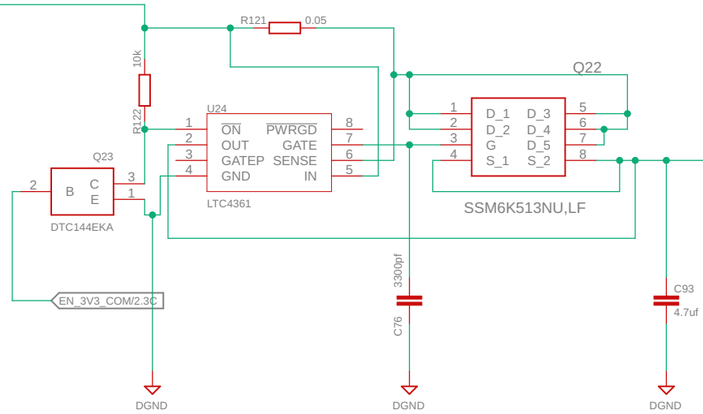

Current_Sensor

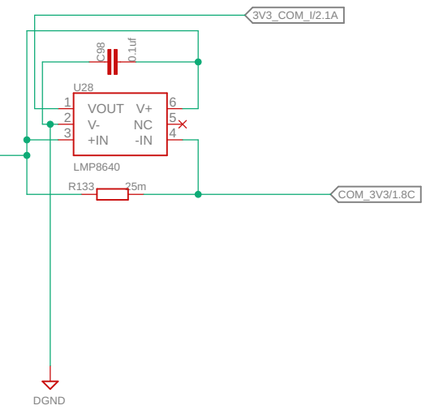

5V

DC/DC 5

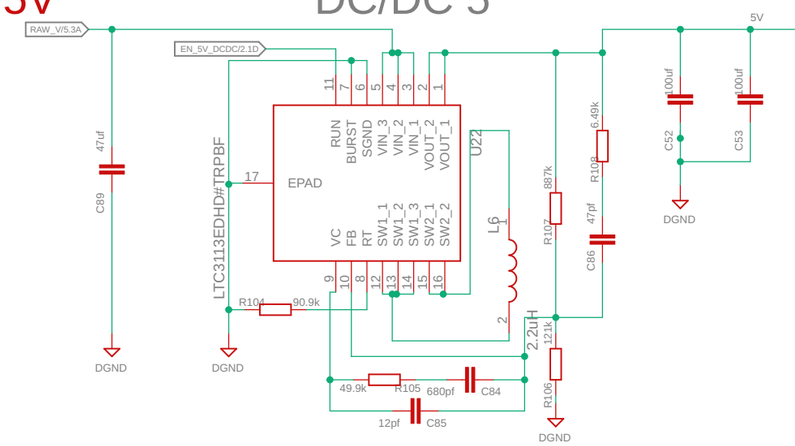

OCP

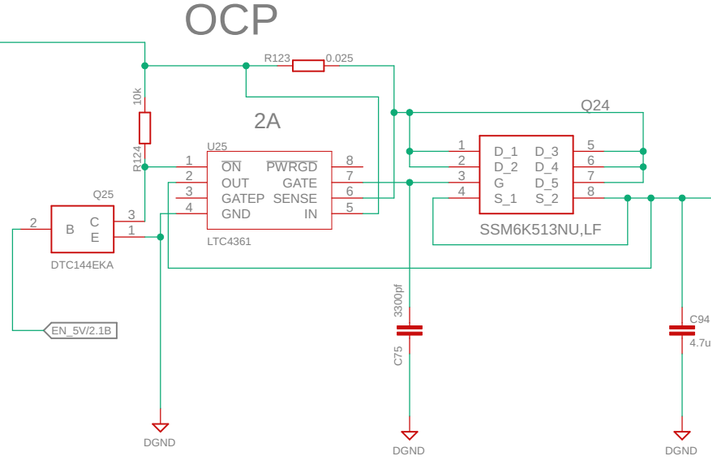

Current_Sensor

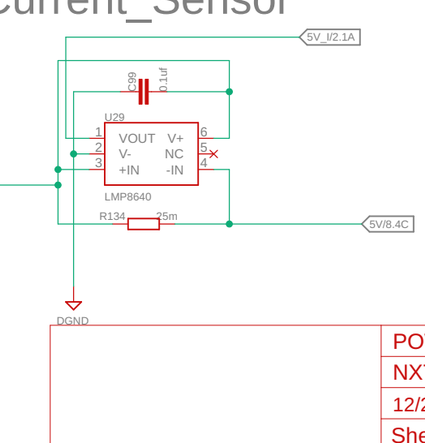

POWER	
NXT_GEN_CUBUS_DAU_v0.0.2 v94	
12/2/2024 5:25 PM	
Sheet: 6/8	

ADC

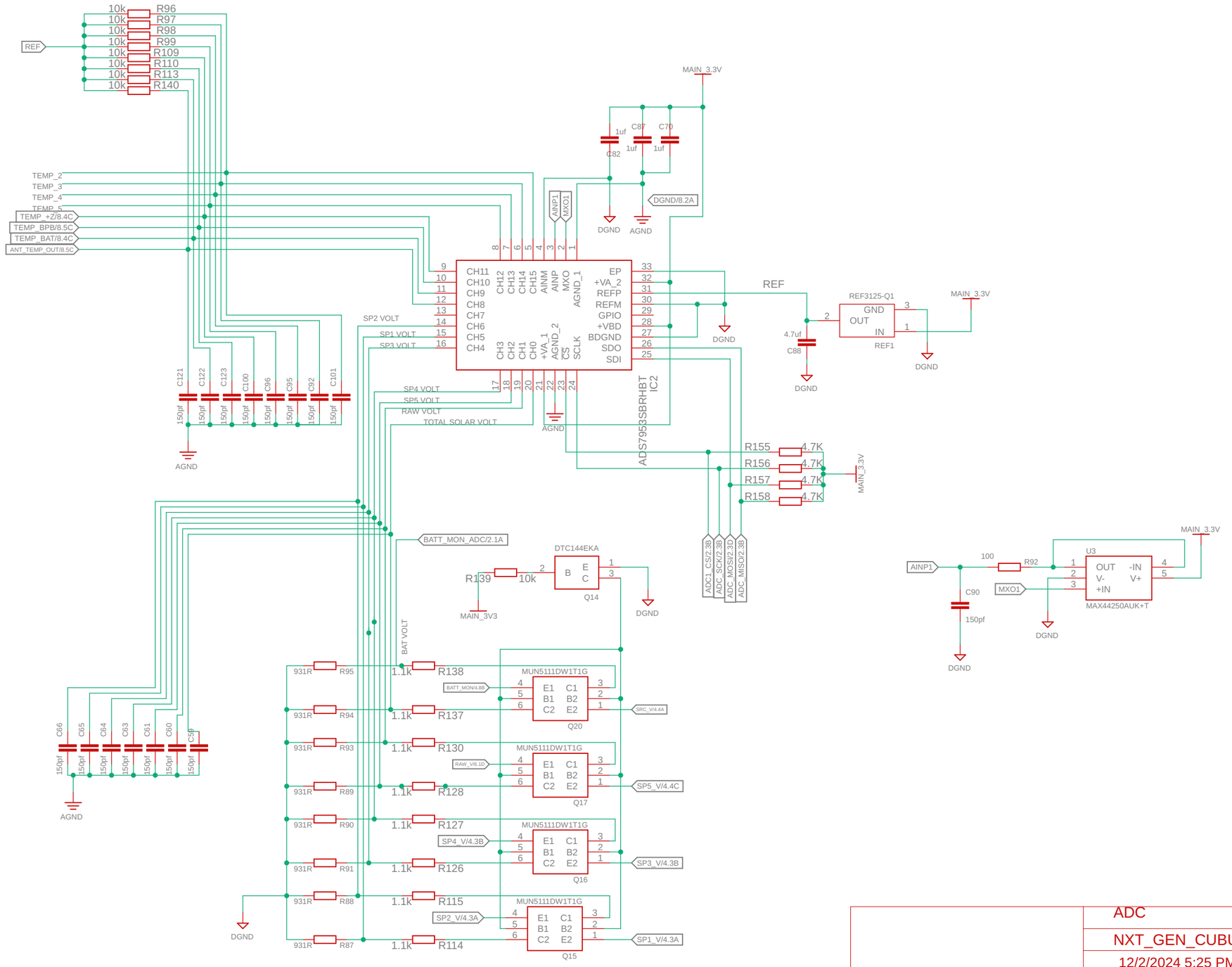

	ADC
	NXT_GEN_CUBUS_DAU_v0.0.2 v94
	12/2/2024 5:25 PM
	Sheet: 7/8

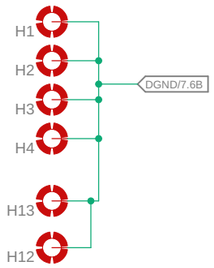

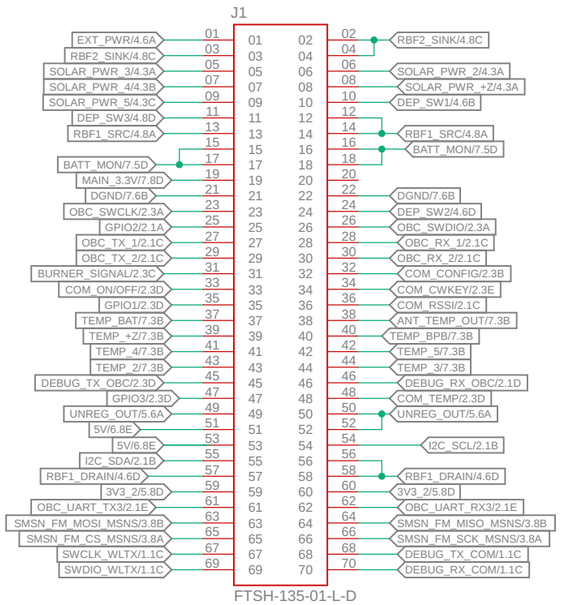

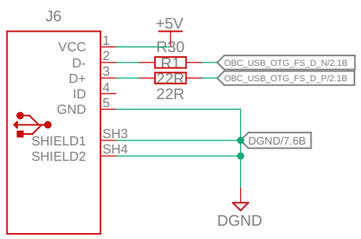

NXT_GEN_CUBUS_DAU_v0.0.2 v94
12/2/2024 5:25 PM
Sheet: 8/8