SOLAR PIN

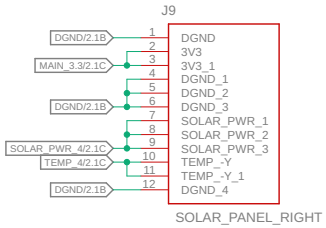

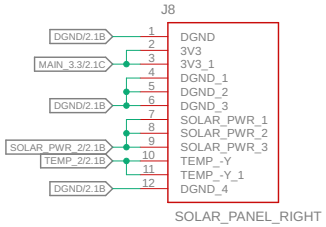

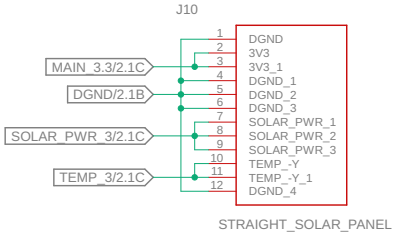

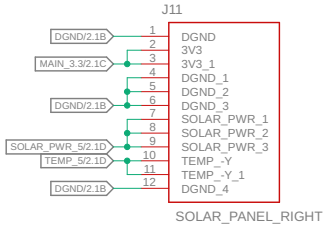

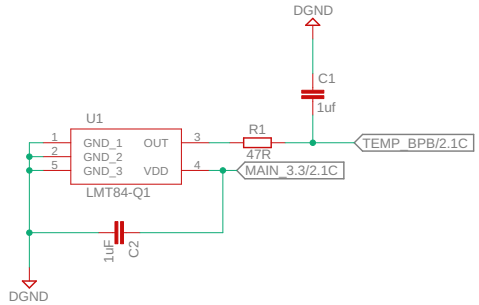

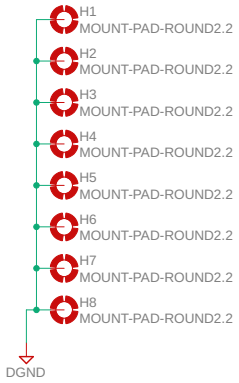

DEPLOYMENT SWITCHES

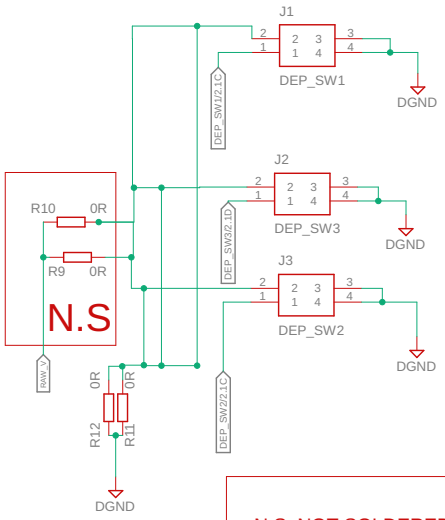

N.S: NOT SOLDERED

NXT_GEN_CUBUS_BPB_FM v1

11/29/2024 10:33 AM

Sheet: 1/2

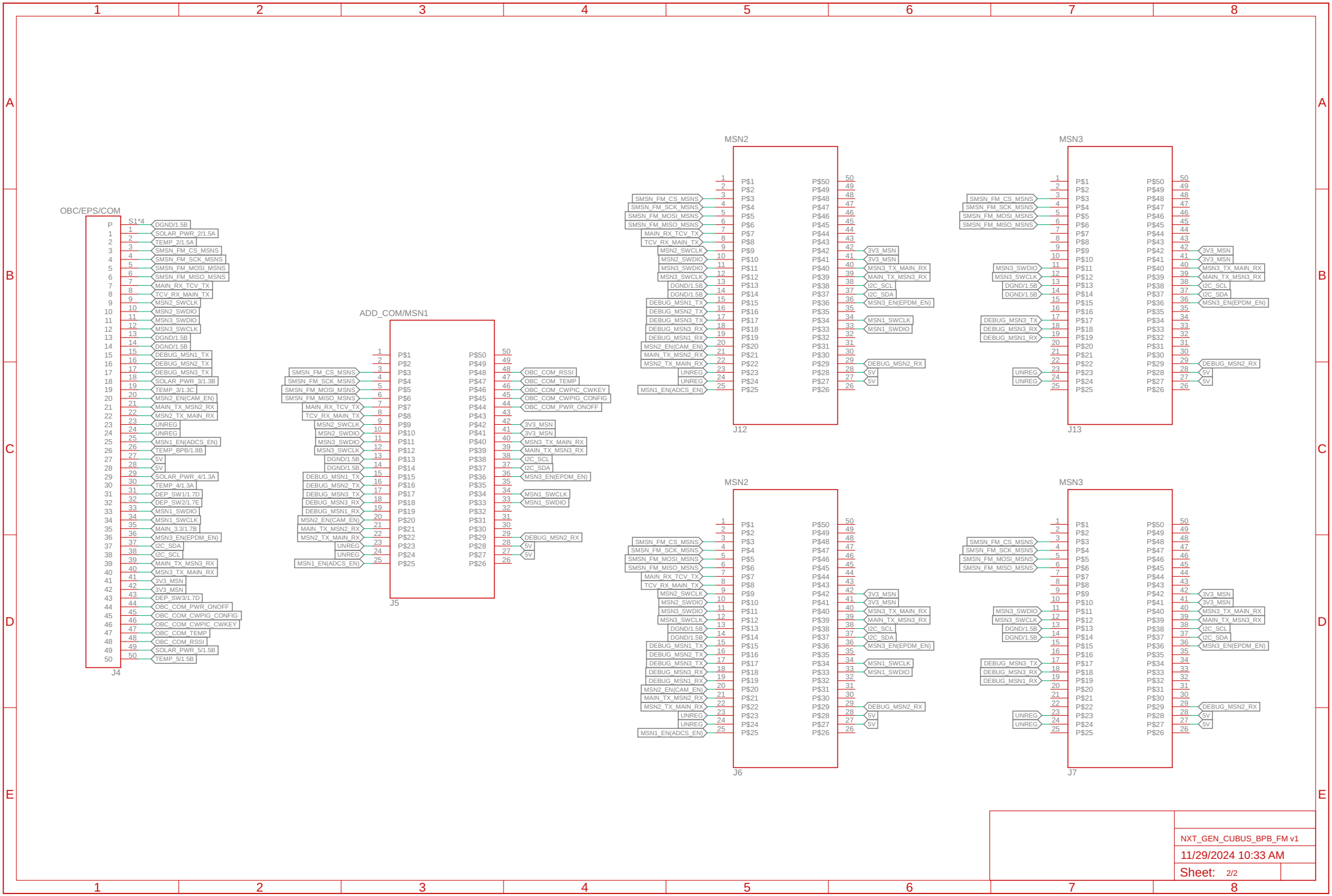
OBC/EPS/COM
S1*4
J4
ADD_COM/MSN1
J5
MSN2
J12
MSN3
J13
MSN2
J6
MSN3
J7
NXT_GEN_CUBUS_BPB_FM v1
11/29/2024 10:33 AM
Sheet: 2/2