Magnetometer

Decoupling capacitors C42, C44, C45 should be placed near to supply pin

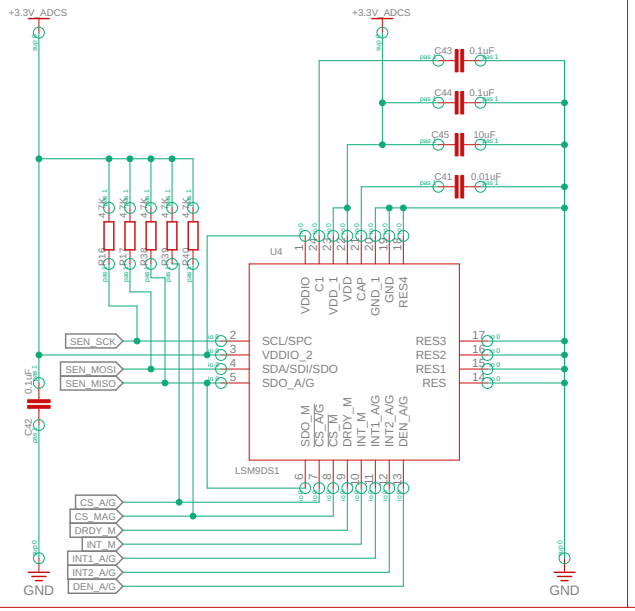

MPU6500

C46, C48 are Bypass capacitor
C47 is filter capacitor

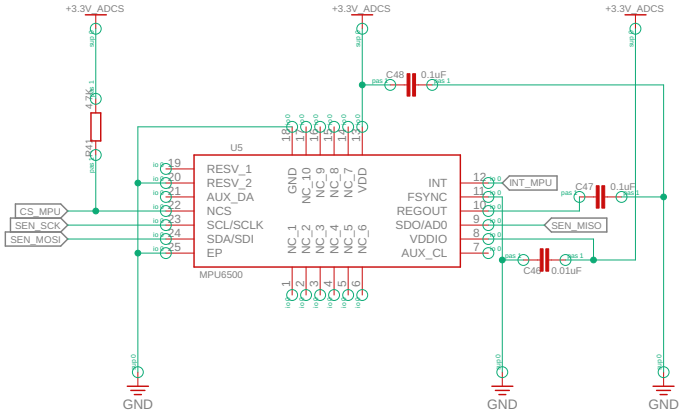

USB

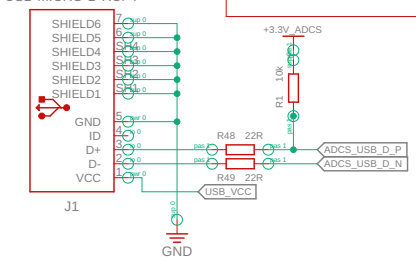

Differential pair lengths should be equal

Switch

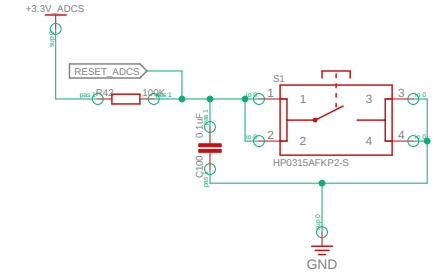

MCU

Bypass capacitors should be placed near MCU

DNP JP3

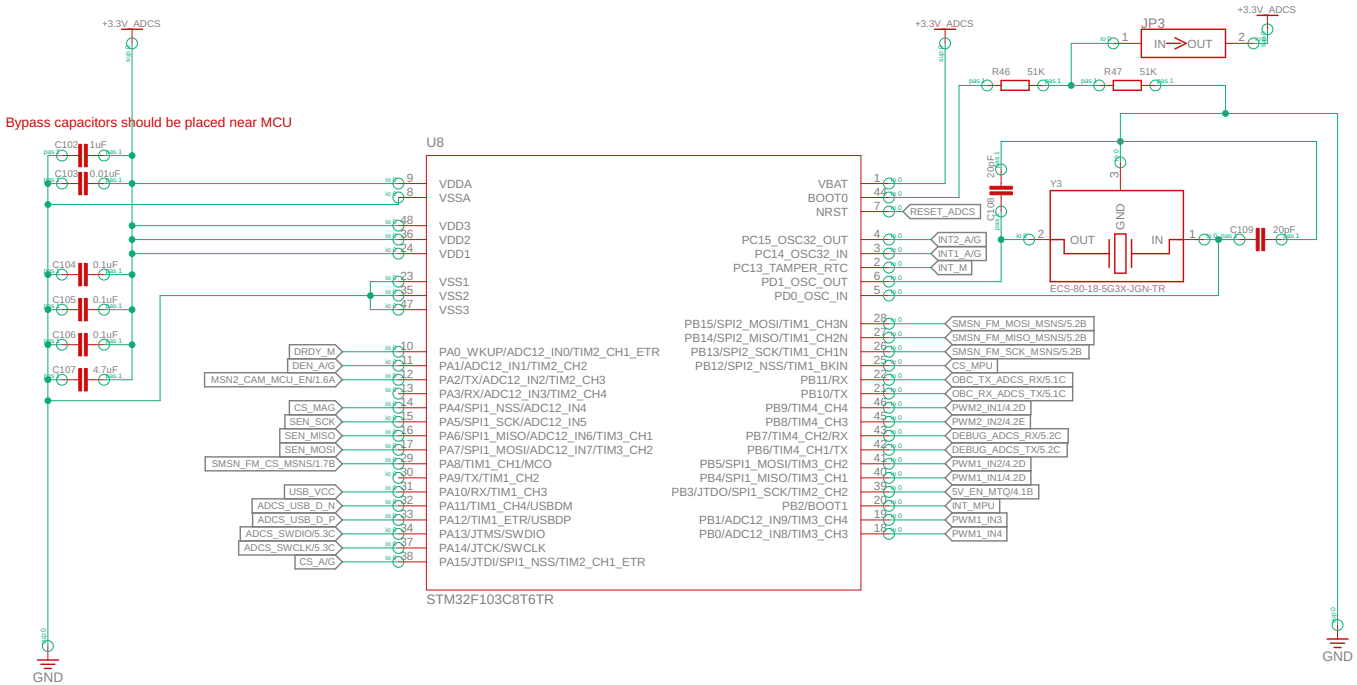

OCP_2 (3V3)

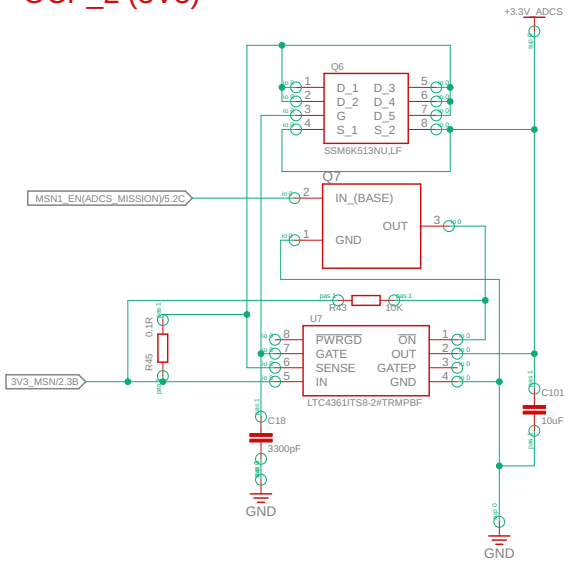

EM_MSN_BRD_2_wt_module v110
not saved!
Sheet: 3/5

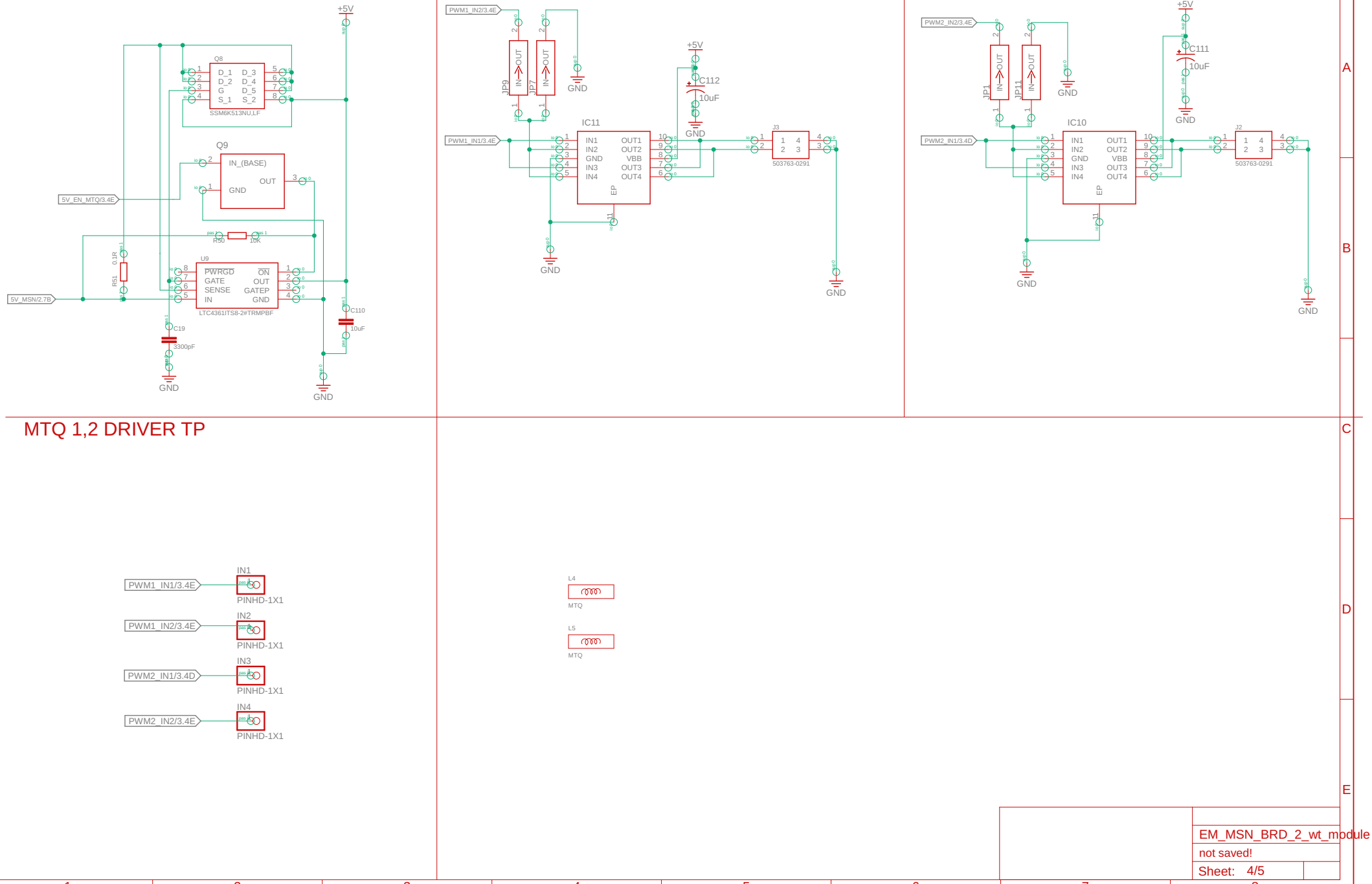
OCP_4 (5V)
MTQ 1,2 DRIVER
DNPJP8
MTQ 3 DRIVER
DNPJP11
MTQ 1,2 DRIVER TP
+5V
Q8
SSM6K513NU,LF
Q9
IN_(BASE)
GND
OUT
5V_EN_MTQ/3.4E
R50
10K
R61
0.1R
U9
PWRGD
GATE
SENSE
IN
ON
OUT
GATEP
GND
LTC4361ITS8-2#TRMPBF
5V_MSN/2.7B
C19
3300pF
C110
10uF
PWM1_IN2/3.4E
PWM1_IN1/3.4E
JP9
JP7
C112
IC11
IN1
IN2
GND
IN3
IN4
OUT1
OUT2
VBB
OUT3
OUT4
EP
J3
503763-0291
PWM2_IN2/3.4E
PWM2_IN1/3.4D
JP1
JP11
C111
IC10
J2
IN1
IN2
IN3
IN4
L4
L5
MTQ
PINHD-1X1
EM_MSN_BRD_2_wt_module v110
not saved!
Sheet: 4/5

camera switches. Not needed in ADCS

50_Pin_Connector

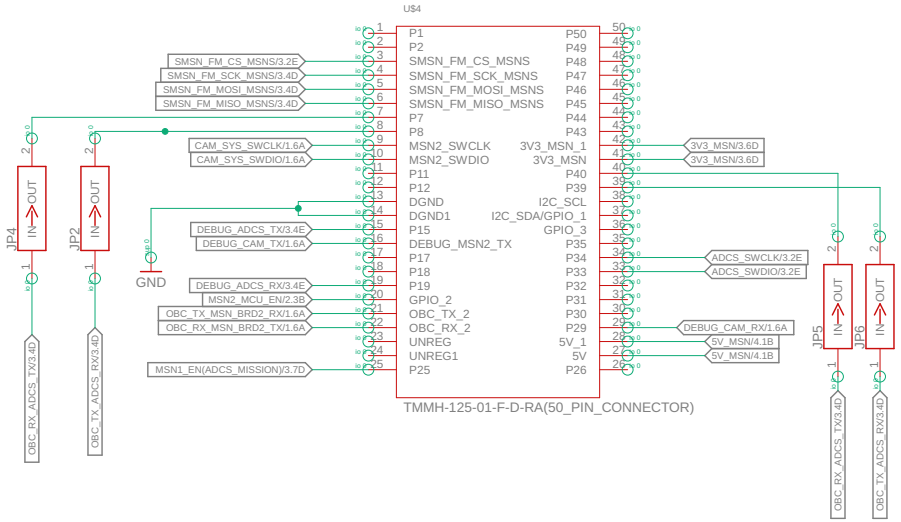

Header_Pin

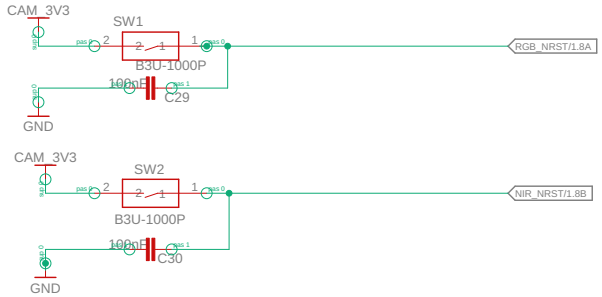

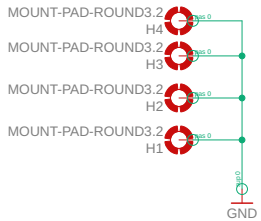

EM_MSN_BRD_2_wt_module v110
not saved!
Sheet: 5/5