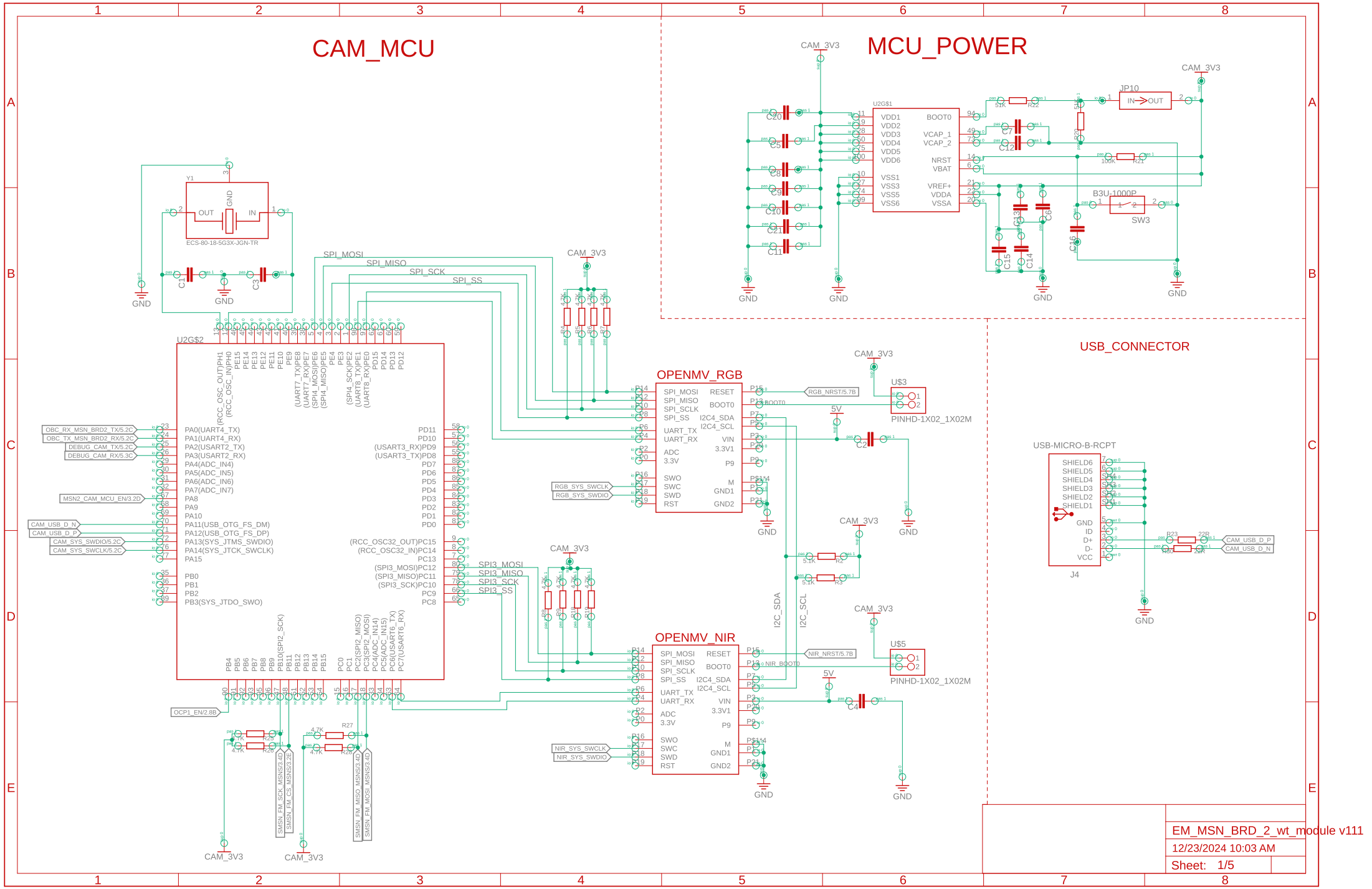


12/23/2024 10:26 AM f=0.72 F:\GerberFiles\S2S\MSN_BRD_2\CAMOutputs\EM_MSN_BRD_2_wt_module v111.pdf (Sheet: 1/5)

# CAM_OCP_2

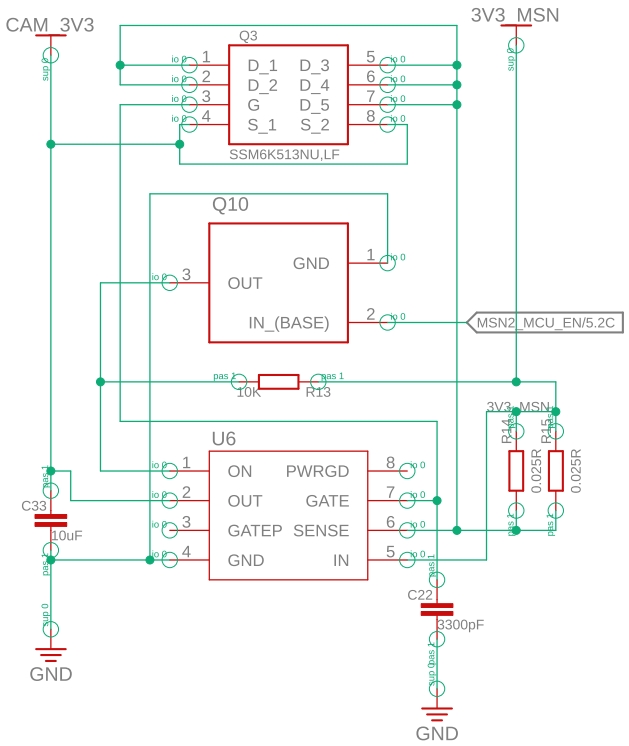


# CAM_OCP_1

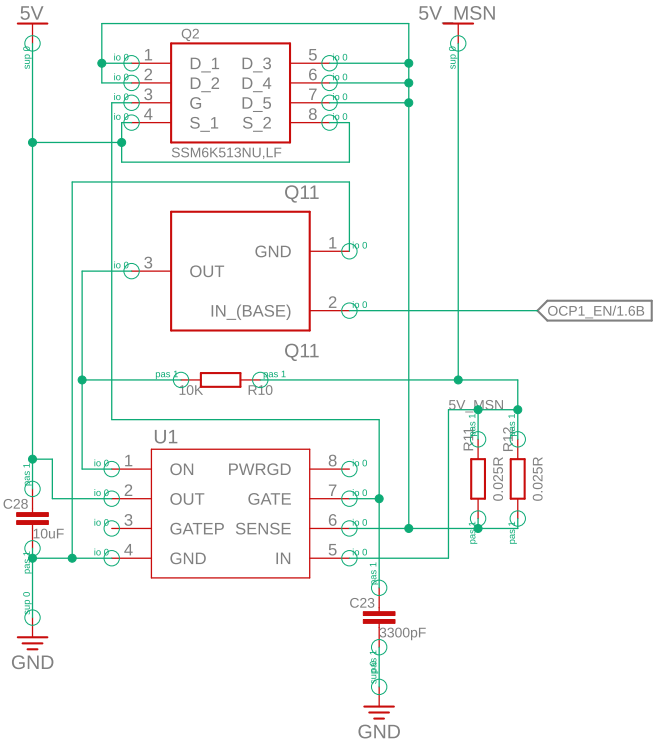


| | |
|---|---|
| >CNAME | |
| EM_MSN_BRD_2_wt_module v111 | |
| 12/23/2024 10:03 AM | |
| Sheet: 2/5 | Rev: >CREVISION |

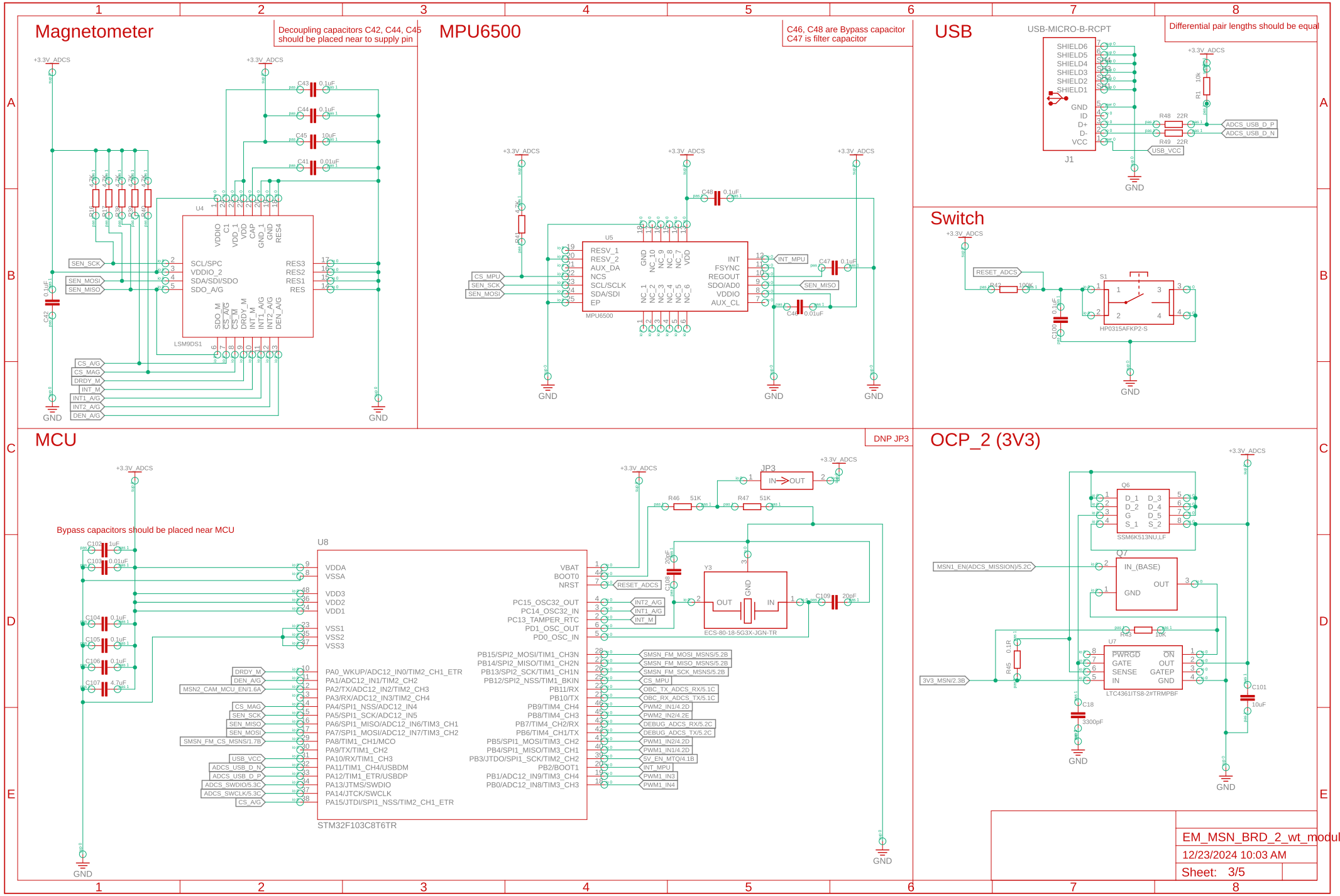
Magnetometer
Decoupling capacitors C42, C44, C45 should be placed near to supply pin
MPU6500
C46, C48 are Bypass capacitor
C47 is filter capacitor
USB
USB-MICRO-B-RCPT
Differential pair lengths should be equal
Switch
MCU
DNP JP3
Bypass capacitors should be placed near MCU
OCP_2 (3V3)
STM32F103C8T6TR
LSM9DS1
MPU6500
HP0315AFKP2-S
SSM6K513NU,LF
LTC4361ITS8-2#TRMPBF
ECS-80-18-5G3X-JGN-TR
EM_MSN_BRD_2_wt_module v111
12/23/2024 10:03 AM
Sheet: 3/5

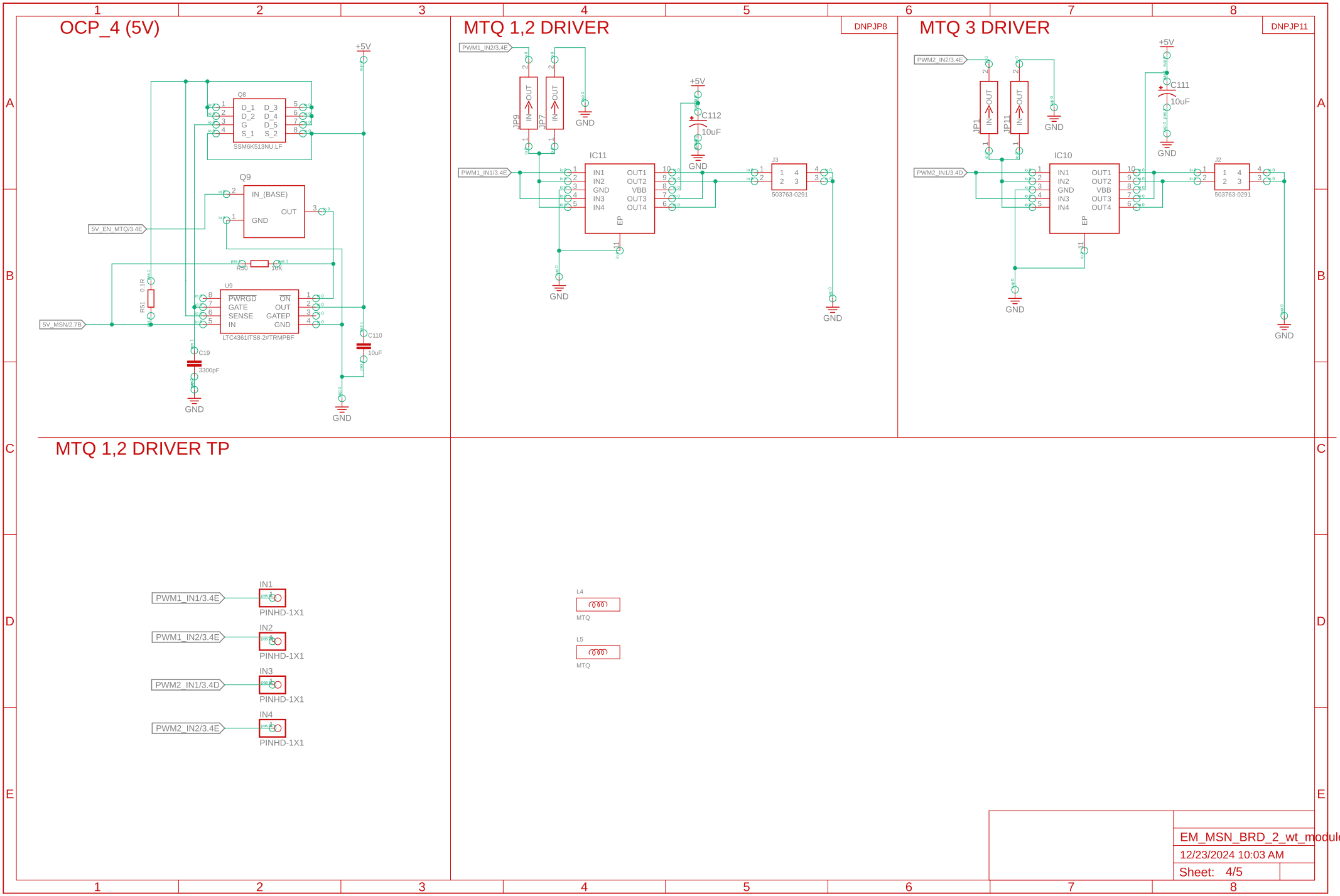
OCP_4 (5V)
MTQ 1,2 DRIVER
DNPJP8
MTQ 3 DRIVER
DNPJP11
MTQ 1,2 DRIVER TP
+5V
GND
Q8
SSM6K513NU,LF
Q9
IN_(BASE)
OUT
GND
5V_EN_MTQ/3.4E
5V_MSN/2.7B
R50
10K
R51
0.1R
U9
PWRGD
ON
GATE
OUT
SENSE
GATEP
IN
GND
LTC4361ITS8-2#TRMPBF
C19
3300pF
C110
10uF
PWM1_IN2/3.4E
PWM1_IN1/3.4E
JP9
JP7
IN
OUT
C112
10uF
IC11
IN1
IN2
GND
IN3
IN4
OUT1
OUT2
VBB
OUT3
OUT4
EP
J3
503763-0291
PWM2_IN2/3.4E
PWM2_IN1/3.4D
JP1
JP11
C111
10uF
IC10
J2
503763-0291
IN1
IN2
IN3
IN4
PWM1_IN1/3.4E
PWM1_IN2/3.4E
PWM2_IN1/3.4D
PWM2_IN2/3.4E
PINHD-1X1
L4
L5
MTQ
EM_MSN_BRD_2_wt_module v111
12/23/2024 10:03 AM
Sheet: 4/5

camera switches. Not needed in ADCS

## 50_Pin_Connector

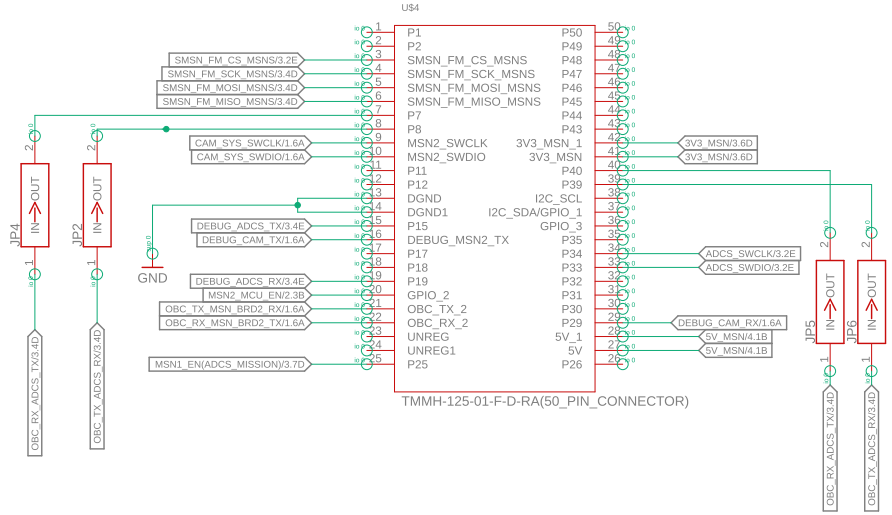


## Header_Pin

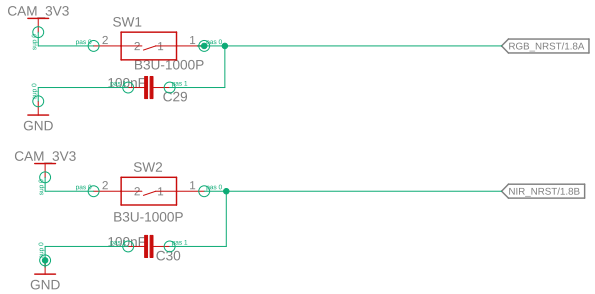


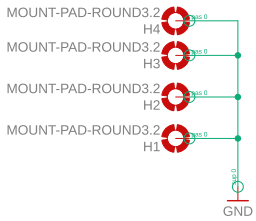


| | |
|---|---|
| EM_MSN_BRD_2_wt_module v111 | |
| 12/23/2024 10:03 AM | |
| Sheet: 5/5 | |