ANTARIKCHYA
अन्तरिक्ष प्रतिष्ठान नेपाल

A R | D C
AMATEUR RADIO DIGITAL COMMUNICATIONS



Attitude Determination and Control System





Introduction

Attitude Determination and Control System (ADCS) is a crucial subsystem of a satellite that determines and controls its orientation in space. For example, an Earth observation satellite must align its camera towards Earth and ADCS is implemented in such cases.There are two types of ADCS: Active ADCS and Passive ADCS. Passive ADCS uses permanent magnets, while Active ADCS utilizes Magnetorquers (MTQs), Reaction Wheels, and Thrusters. Our S2S satellite features Active ADCS as a technology demonstration mission. It uses a Gyroscope and a Magnetometer to determine the satellite's orientation and controls its attitude using two magnetorquers (MTQs).The S2S satellite's ADCS mission is designed to test active ADCS as a preliminary step for future APN satellite missions. The primary objectives are to use orientation sensors and an EKF filter to determine the satellite's orientation and to use the available magnetic torquers and the B-dot algorithm to achieve magnetic control.

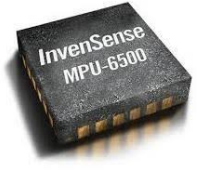

Gyroscope

Source: *Mouser Electronics*



Magnetometer

Source: *Mouser Electronics*



Magnetorquer (MTQx2)

Source: *CUBESPACE*

IMU :Inertial Measurement Unit

ANTARIKCHYA
अन्तरिक्ष प्रतिष्ठान नेपाल

मिशनको विवरण र उद्देश्यहरू
(Statement And Objectives)



- **<u>मिशनको विवरण(Mission Statement)</u>**
  - भविष्यका APN उपग्रहका मिसनहरूको लागि प्रारम्भिक कदमको रूपमा यस S2S उपग्रहमा Active ADCS परिक्षण गरिनेछ

    To demonstrate the active satellite attitude control as the initial step for future APN satellite missions

- **<u>मिशनको उद्देश्यहरू(Mission Objectives)</u>**
  - उपग्रहको दिशा पत्ता लगाउन दिशा निर्धारण सेन्सरहरू र EKF Filter को प्रयोग

    Utilize attitude determination sensors and EKF filter to determine satellite orientation
  - उपलब्ध चुम्बकीय टर्कर्स प्रयोग गरेर चुम्बकीय नियन्त्रण प्राप्त गर्न Bdot Algorithm को प्रयोग

    Implement Bdot algorithm to achieve magnetic control using available magnetorquers

EM ADCS BOARD

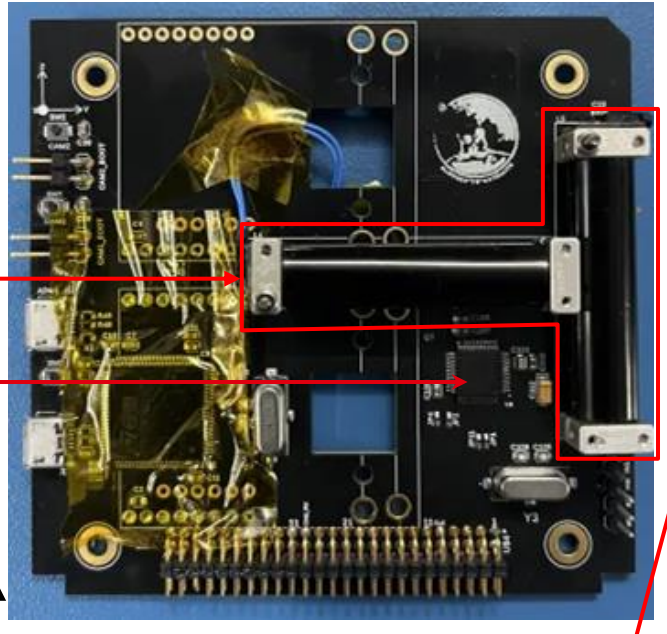

Top View

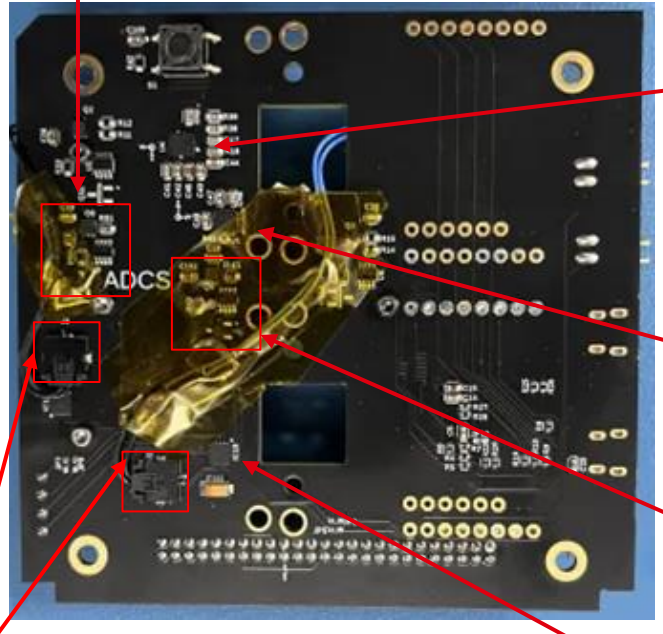

Bottom View

5V OCP

MTQ

MCU
(STM32F103)

Z
Y

X
Z
Y
LSM9DS1
Magnetometer

Y
Z
X
MPU6500
Gyroscope

3V3 OCP

MTQ
Connector

MTQ
Driver

MCU: Microcontroller
MTQ: Magnetorquer
OCP: Overcurrent Protection

ADCS Block Diagram

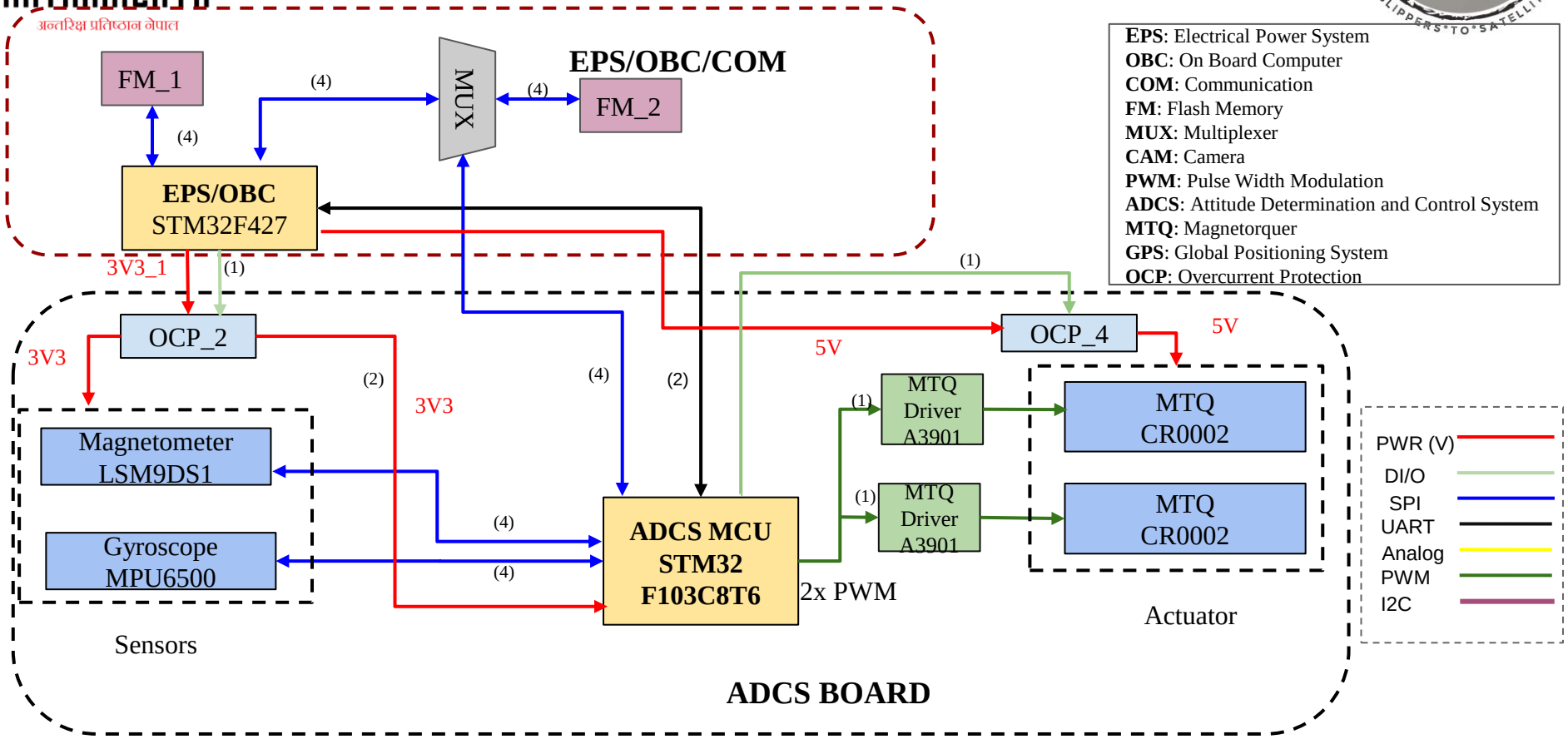

EPS: Electrical Power System
OBC: On Board Computer
COM: Communication
FM: Flash Memory
MUX: Multiplexer
CAM: Camera
PWM: Pulse Width Modulation
ADCS: Attitude Determination and Control System
MTQ: Magnetorquer
GPS: Global Positioning System
OCP: Overcurrent Protection

Block Diagram Progress

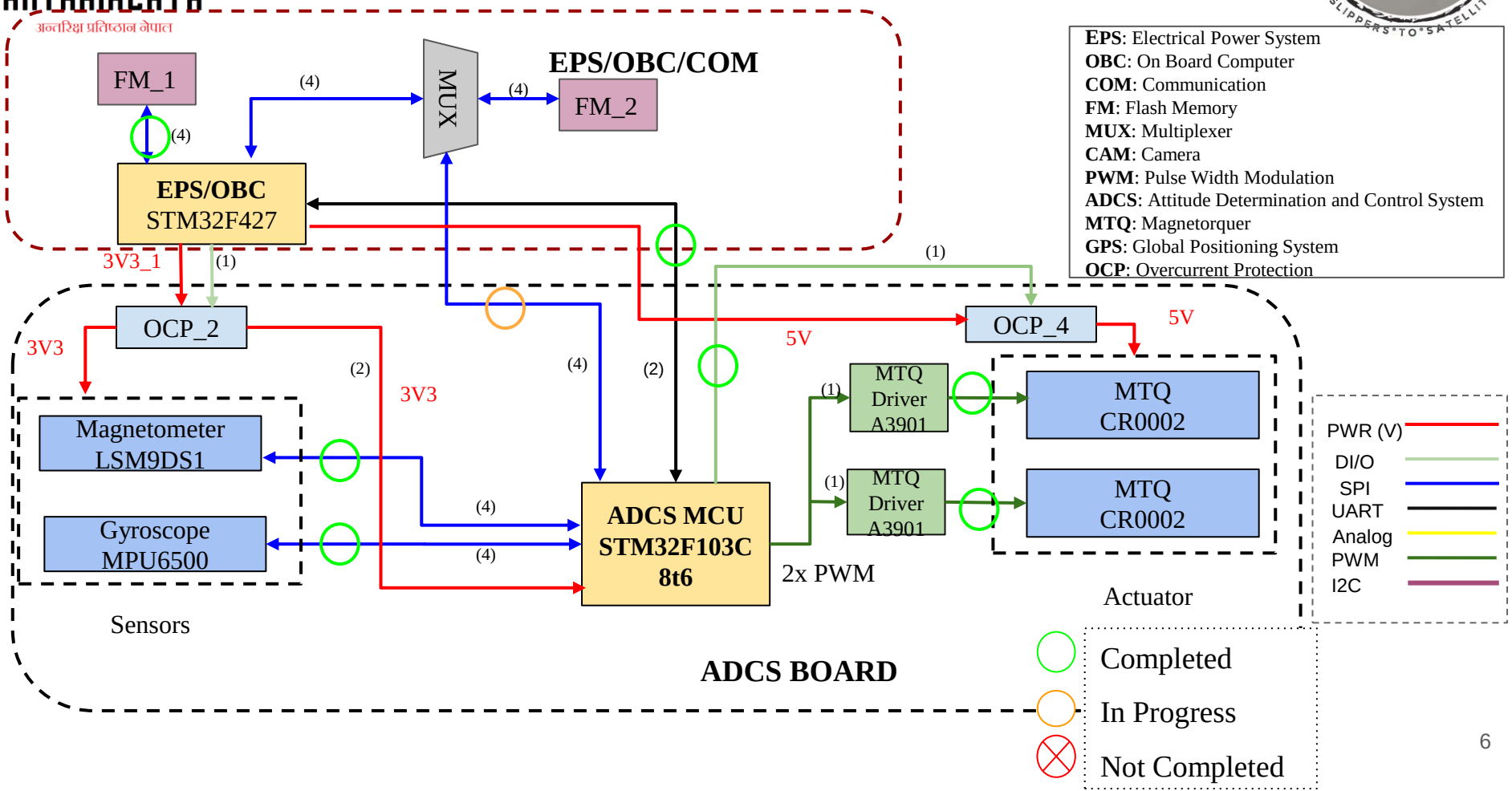

EPS: Electrical Power System
OBC: On Board Computer
COM: Communication
FM: Flash Memory
MUX: Multiplexer
CAM: Camera
PWM: Pulse Width Modulation
ADCS: Attitude Determination and Control System
MTQ: Magnetorquer
GPS: Global Positioning System
OCP: Overcurrent Protection

Program Flow

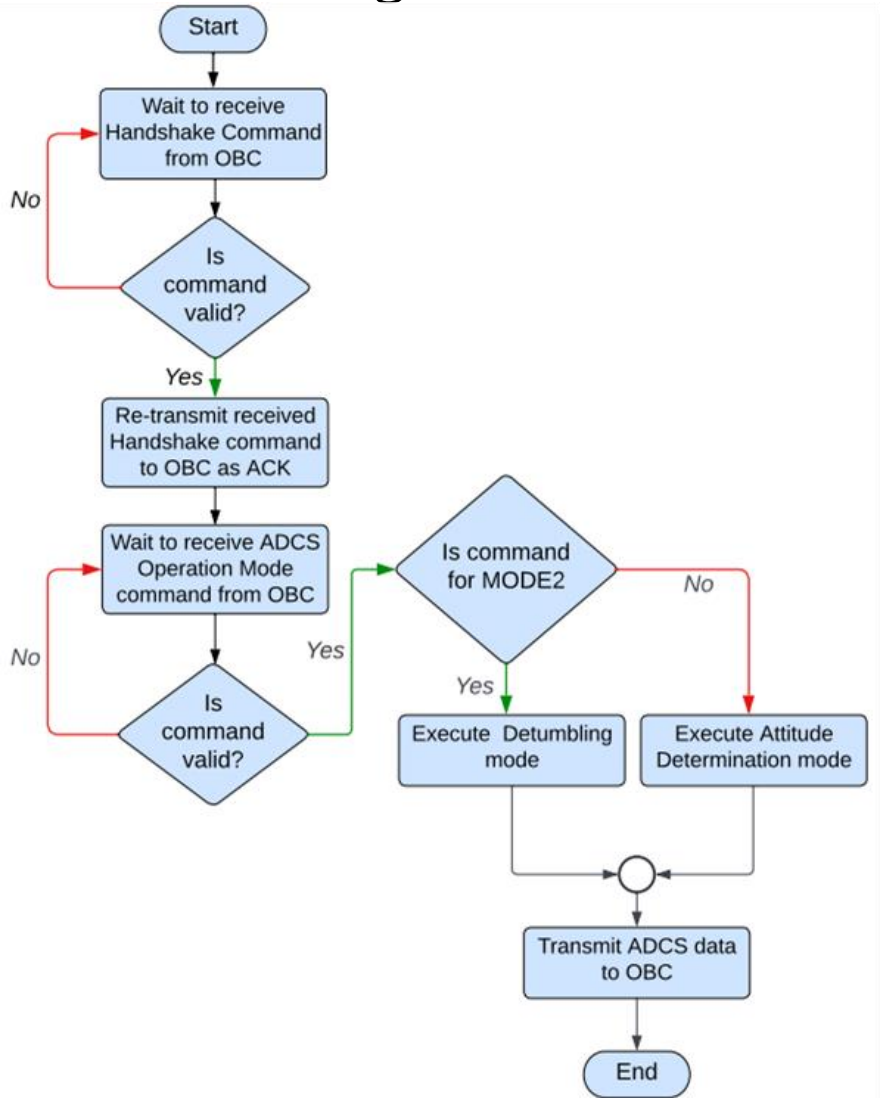

ADCS Mechanism

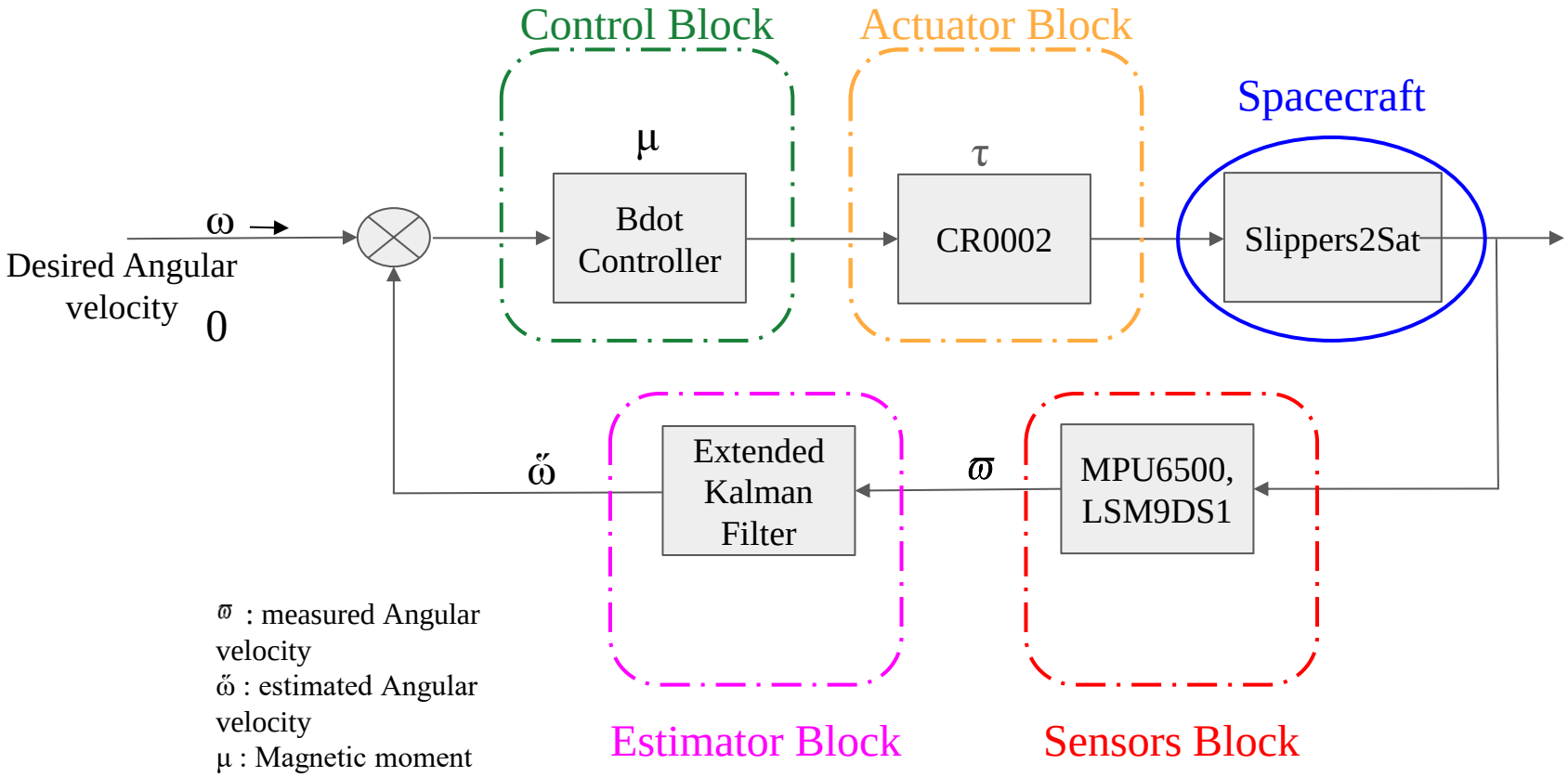

ϖ : measured Angular velocity
ω̆ : estimated Angular velocity
μ : Magnetic moment
τ : Induced magnetic torque

ADCS Mission Modes

Mission Modes	Description	Energy Consumption Estimation
Attitude Determination Mode	Determine satellite orientation in space	**4.345 mWh (1.05 % duty cycle)**
Detumbling Mode	Magnetorquers is used to actively control the magnetic field of the satellite	**20.595 mWh (1.05 % duty cycle)**