ANTARIKCHYA
अन्तरिक्ष प्रतिष्ठान नेपाल



Earthquake Precursor Detection Mission(EPDM)
(भूकम्पको पूर्वसंकेत पहिचान गर्ने मिशन)

ANTARIKCHYA
अन्तरिक्ष प्रतिष्ठान नेपाल

Introduction(परिचय)



The Earthquake Precursor Detection Mission (EPDM) is designed to use a Quad-Mag technology payload, consisting of four PNI RM3100 magnetometers, to detect and analyze electromagnetic signals in the Ultra-Low Frequency (ULF: below 3 Hz) and Extremely Low Frequency (ELF: 3 Hz to 3 kHz) ranges, which are generated from the Earth's surface before an earthquake. Unlike traditional satellites that rely on long telescopic or deployable booms to protect magnetometers from stray magnetic fields caused by internal electric subsystems, the EPDM employs Quad-Mag technology and the Undetermined Blind Source Separation (UBSS) algorithm, both tested in the University of Michigan lab to remove interference or stray magnetic field and accurately measure the Earth's magnetic field. The PNI RM3100 magnetometers, proven suitable for CubeSat missions, operate with high efficiency and are capable of functioning in space environments. The primary objectives of mission is to demonstrates the capability of space-based technologies to separate stray magnetic fields from ambient magnetic fields for detecting earthquake precursor signals without using any mechanical boom.

ANTARIKCHYA
अन्तरिक्ष प्रतिष्ठान नेपाल

मिशनको विवरण (Statement)



- **<u>मिशनको विवरण (Mission Statement)</u>**
  - **भूकम्पको पूर्वसंकेत पहिचान गर्ने मिशन** (EPDM) ले **क्वाड-म्याग** प्रबिधि बाट अनावस्यक तरङ्गहरु हटाई, १ U बूमलेस क्यूबस्याट प्रविधिको प्रयोग गरी भूकम्प अघी देखिने **अत्यन्त कम आवृत्ति** (ELF) र **अति कम आवृत्ति** (ULF) संकेतहरू पत्ता लगाउनको लागि पृथ्वीको चुम्बकीय क्षेत्रमा निगरानी गर्ने लक्ष्य राख्दछ।

    The **Earthquake Precursor Detection Mission** (EPDM) aims to monitor earth magnetic field anomalies by detecting Ultra-Low Frequency (ULF)/Extremely Low Frequency(ELF) signals that precede earthquakes, utilizing 1U boomless CubeSat technology with **Quad-mag** technology for noise reduction.[3]

मिशनको उद्देश्यहरू
(Objectives)

- **<u>मिशनको उद्देश्यहरू (Mission Objectives)</u>**
  - १ U क्यूबस्याटमा अनावस्यक तरङ्गहरु हटाई बूम्लेस प्रबिधिको प्रयोग गरि **क्वाड-म्याग** प्रबिधिलाई एकीकृत गर्नु हो ।

    To integrate Quad-mag technology for a boomless measurement for noise reduction in 1U CubeSats.
  - भूकम्प अघि पृथ्वीको सतहबाट निस्कने **विद्युत चुम्बकीय तरङ्गहरूको** ढाँचाको विश्लेषण गर्नु हो ।

    To analyze electromagnetic wave signal pattern to detect precursors of earthquakes.
  - अन्तरिक्षबाट भूकम्प पत्ता लगाउन र भविष्यवाणी गर्न यो **प्रविधिको प्रदर्शन** गर्नु हो।

    To demonstrate this technology to detect and predict earthquakes in space.

EPDM MSN EM BOARD(पेलोड)

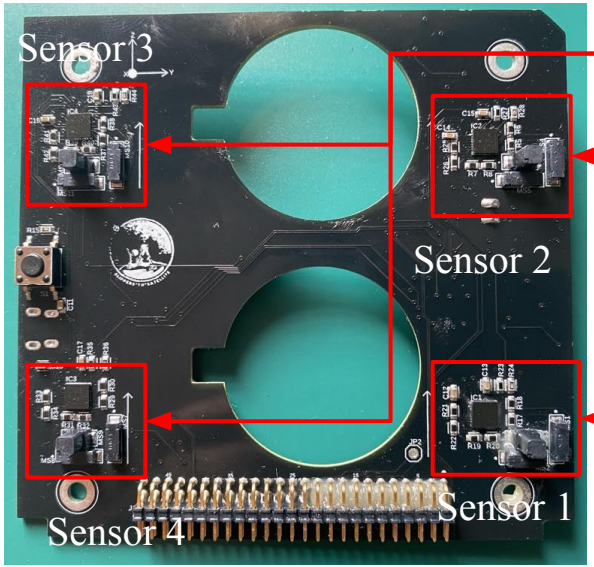

RM3100
Magnetometer

OCP(Overcurrent
protection)

MCU

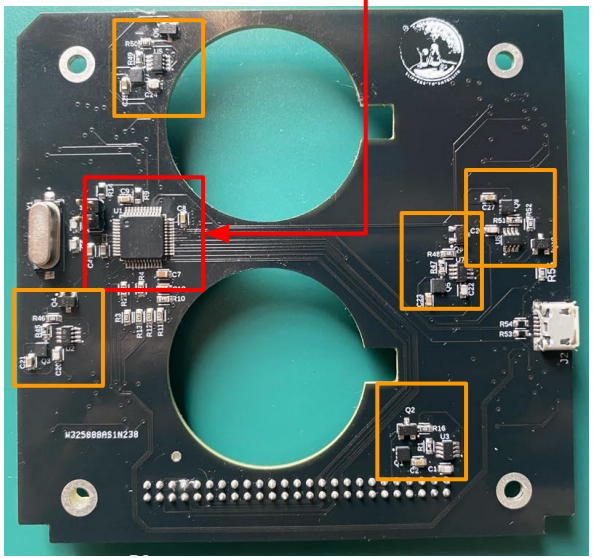

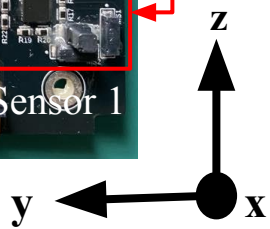

Top(माथिको भाग)

Bottom(तलको भाग)

Block Diagram

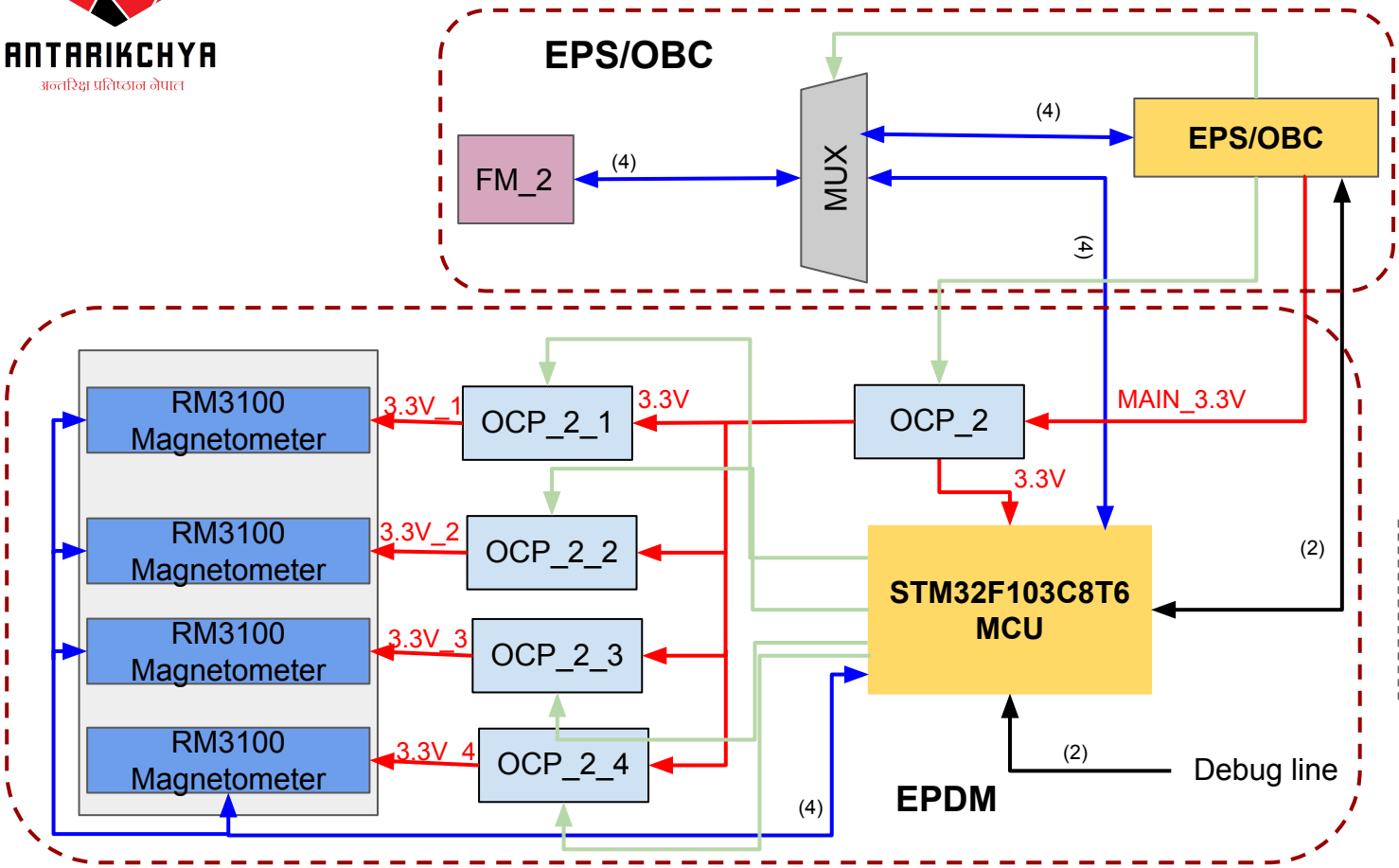

OBC: On Board Computer
EPS: Electronics Power System
UART: Universal Asynchronous Receiver/Transmitter
SPI: Serial Peripheral Interface
FM: Flash Memory
EPDM: Earthquake Precursor Detection Mission
OCP: Overcurrent Protection

SPI
Debug
UART
Power

Block Diagram Progress

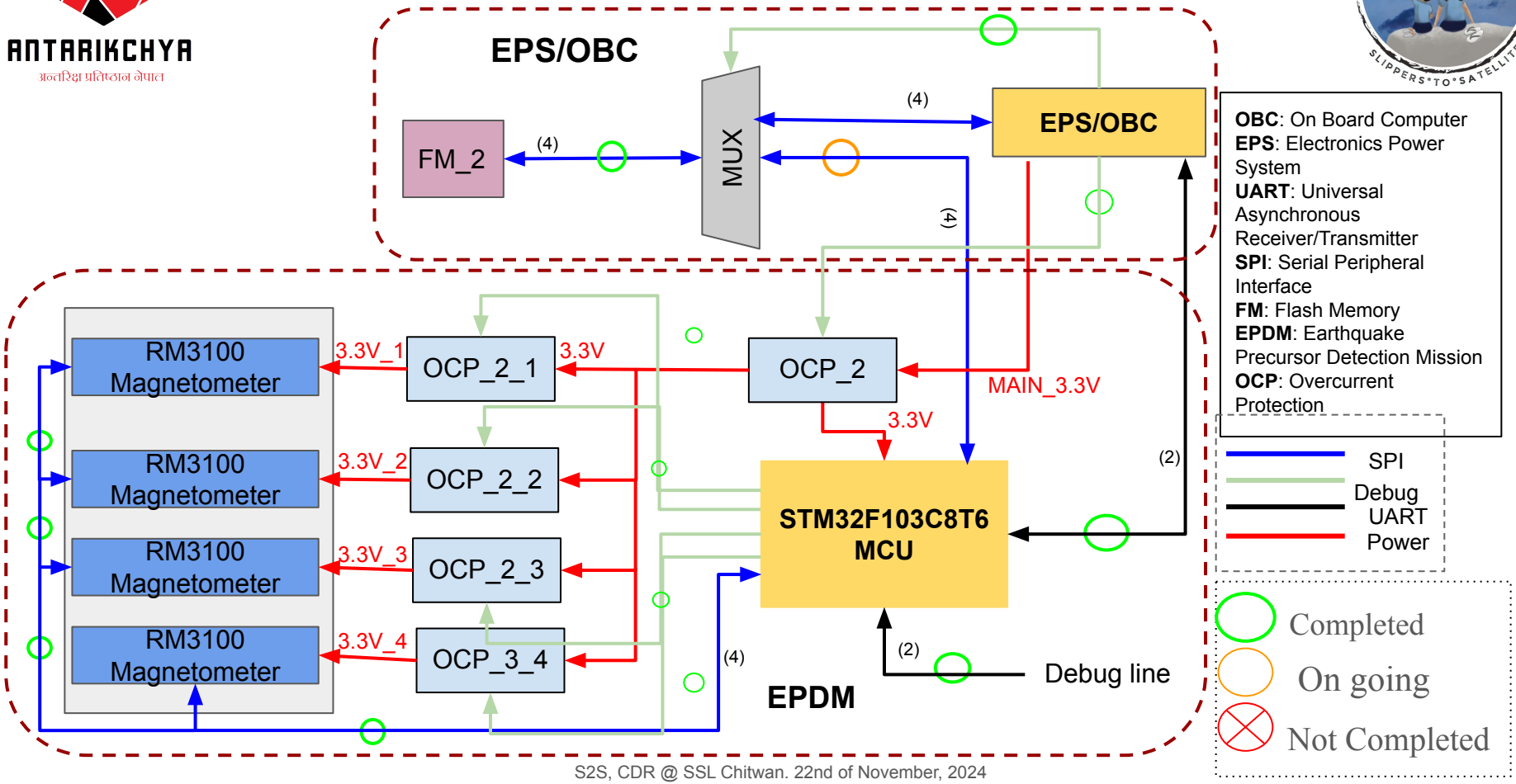

Program flow between OBC and EPDM MCU

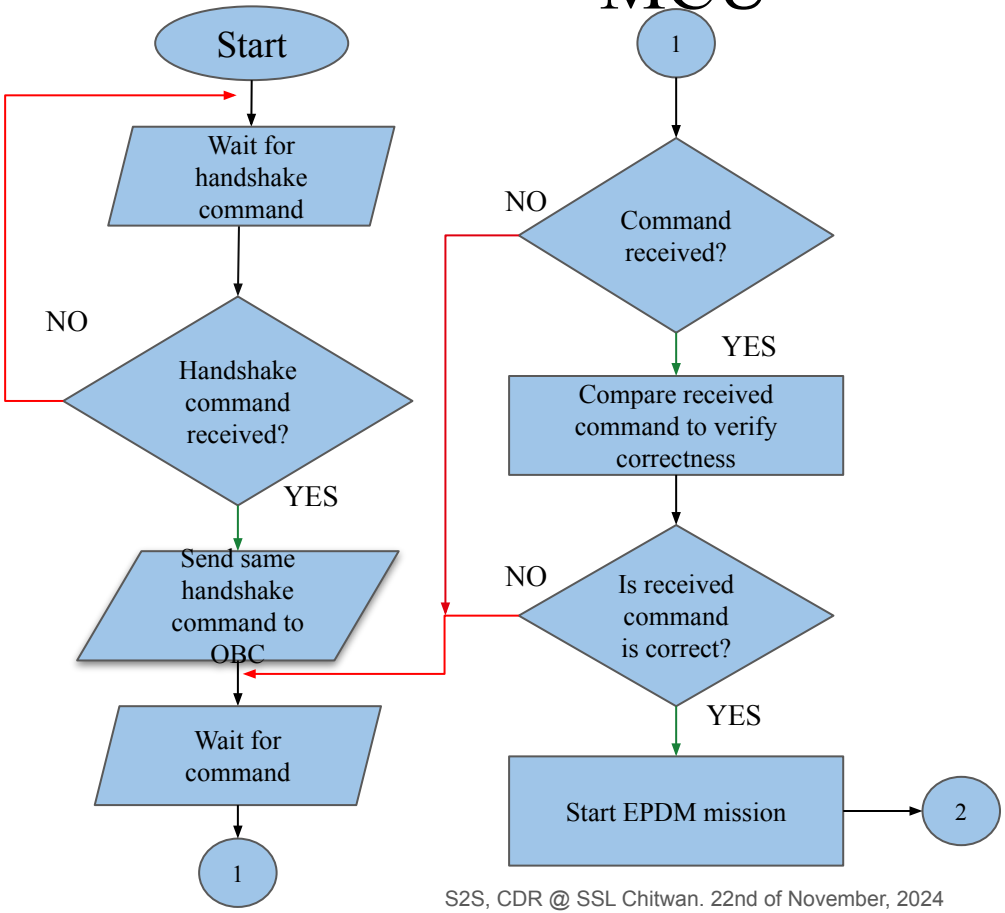

ANTARIKCHYA
अन्तरिक्ष प्रतिष्ठान नेपाल



Sub-Mission
Undetermined Blind Source Separation(UBSS) Algorithm
(एकैसाथ मिश्रित भएका अनावस्यक सङ्केत आथवा तरङ्गहरूलाई छुट्टाउने प्रविधि)

मिशनको विवरण
(Statement)

- **मिशनको विवरण (Mission Statement)**
  - एकैसाथ मिश्रित भएका सङ्केत आथवा तरङ्गहरूलाई छुट्टाउने प्रविधि (UBSS) लाई उपग्रहका इलेक्ट्रोनिक प्रणालीहरूले गर्दा उत्पन्न हुने गरेका अनावस्यक चुम्बकीय तरङ्गहरुलाई वातावरणीय चुम्बकीय क्षेत्रबाट प्रभावकारी रूपमा छुट्याउन प्रयोग गरिन्छ।

    The UBSS (Undetermined Blind Source Separation) algorithm is used to effectively separate noise, such as stray magnetic fields created by the satellite's electronic systems, from the naturally occurring ambient magnetic field.

ANTARIKCHYA
अन्तरिक्ष प्रतिष्ठान नेपाल

मिशनको उद्देश्यहरू
(Objectives)



- **मिशनको उद्देश्यहरू (Mission Objectives)**
  - उपग्रहका सेन्सर अवलोकनहरूलाई सुधार गर्न उपग्रहका इलेक्ट्रोनिक प्रणालीहरूले उत्पन्न हुने तरङ्गहरुलाई वातावरणीय चुम्बकीय क्षेत्रबाट प्रभावकारी रूपमा छुट्याएर सुधार गर्नु हो ।
    To enhance satellite sensor observations by effectively separating noise (such as stray magnetic fields) from the ambient magnetic field.

  - विद्युत चुम्बकीय क्षेत्रमा भूकम्पको पूर्वसंकेतको रूपमा अत्यन्त कम आवृत्ति (ELF) र अति कम आवृत्ति (ULF) सङ्केतहरू पत्ता लगाउनु हो।
    To detect and analyze Extremely Low Frequency (ELF) and Ultra Low Frequency (ULF) precursors of earthquake in the magnetic field.

UBSS (Ref)

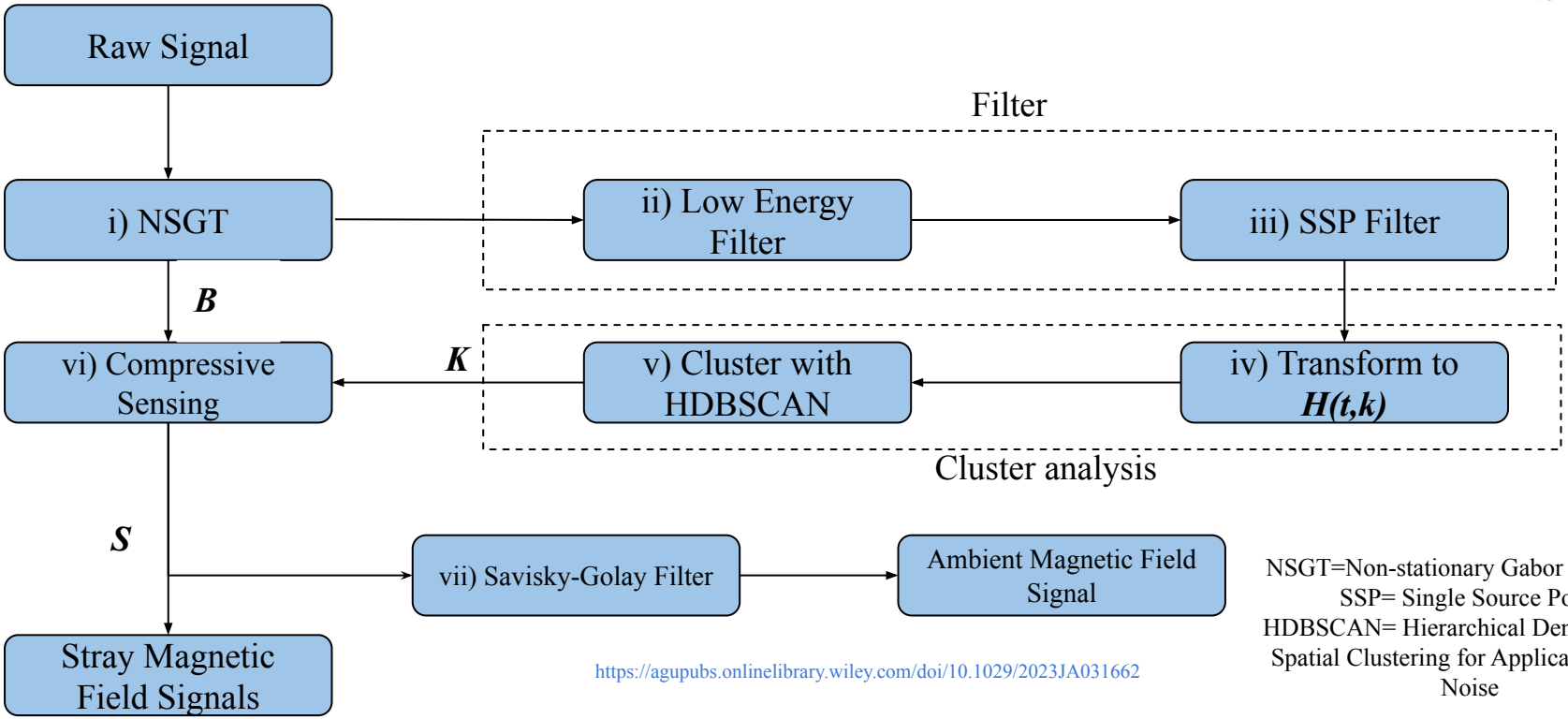

https://agupubs.onlinelibrary.wiley.com/doi/10.1029/2023JA031662

NSGT=Non-stationary Gabor Transform
SSP= Single Source Point
HDBSCAN= Hierarchical Density Based Spatial Clustering for Applications with Noise

ANTARIKCHYA
अन्तरिक्ष प्रतिष्ठान नेपाल

Success Criteria



EPDM Modes	Success Criteria
Minimum	Can measure ambient magnetic field
Full	Can **detect** Earthquake precursor **ELF(Extremely low frequency)/ULF(Ultra low frequency)**
Extra	Can detect and predict smallest **(<M4.0) tremor**